Product datasheet

Specifications

Green Premium™

distributed analog input Modicon Momentum - 8 Input

170AAI03000

Main

Range Of Product	Modicon Momentum automation platform
Product Or Component Type	Analogue input base
Analogue Input Number	8
Analogue Input Type	Differential
Analogue Input Range	+/- 20 mA 14 bits + sign 250 kOhm 4...20 mA 15 bits + sign 250 kOhm +/- 10 V 14 bits + sign > 0.1 kOhm +/- 5 V 14 bits + sign > 0.1 kOhm 1...5 V 15 bits + sign > 0.1 kOhm

Complementary

Data Format	Full 16 bits signed
Absolute Accuracy Error	+/- 0.13 % full scale 25 °C 1...5 V +/- 0.19 % full scale 60 °C 1...5 V +/- 0.21 % full scale 25 °C +/- 5 V +/- 0.26 % full scale 60 °C +/- 5 V +/- 0.27 % full scale 25 °C +/- 10 V +/- 0.27 % full scale 25 °C 4...20 mA +/- 0.32 % full scale 25 °C +/- 20 mA +/- 0.32 % full scale 60 °C +/- 10 V +/- 0.38 % full scale 60 °C 4...20 mA +/- 0.41 % full scale 60 °C +/- 20 mA
Conversion Time	12 ms 8
Isolation Between Channels	+/- 200 V DC for 1 minute
Isolation Between Channels And Ground	500 V AC for 1 minute
Isolation Between Channels And Bus	500 V AC for 1 minute
Permissible Common Mode Voltage	100 V 47...63 Hz DC between channels to ground 250 V 47...63 Hz AC between channels to ground
Common Mode Rejection	> 80 dB between channels to ground
External Power Requirement	< 382 mA DC 20.4...28.8 V DC 24 V DC
Reverse Polarity Protection	Internal
Marking	CE
Local Signalling	1 LED (green) for ready 8 LEDs for channel status
Electrical Connection	2 connectors for removable terminal blocks
Depth	47.5 mm
Height	125 mm

Disclaimer: This documentation is not intended as a substitute for and is not to be used for determining suitability or reliability of these products for specific user applications

Width	141.5 mm
Net Weight	0.215 kg

Environment

Standards	EN 50081-2 IEC 1131
Product Certifications	FM Class 1 Division 2 CSA UL
Protective Treatment	TC
Resistance To Electrostatic Discharge	4 kV contact conforming to IEC 801-2 8 kV on air conforming to IEC 801-2
Resistance To Electromagnetic Fields	10 V/m 80...1000 MHz conforming to IEC 801-3
Ambient Air Temperature For Operation	0…60 °C
Ambient Air Temperature For Storage	-40…85 °C
Relative Humidity	95 % without condensation
Operating Altitude	<= 5000 m

Packing Units

Unit Type Of Package 1	PCE
Number Of Units In Package 1	1
Package 1 Height	5.5 cm
Package 1 Width	18.0 cm
Package 1 Length	26.0 cm
Package 1 Weight	398.0 g

Contractual warranty

Warranty	18 months

Sustainability

Green Premium™ label is Schneider Electric's commitment to delivering products with best-in-class environmental performance. Green Premium promises compliance with the latest regulations, transparency on environmental impacts, as well as circular and low-CO_2 products.

Guide to assessing product sustainability is a white paper that clarifies global eco-label standards and how to interpret environmental declarations.

Learn more about Green Premium >

Guide to assess a product's sustainability >

Transparency RoHS/REACh

Well-being performance

Mercury Free

Rohs Exemption Information	Yes

Certifications & Standards

Reach Regulation	REACh Declaration
Eu Rohs Directive	Pro-active compliance (Product out of EU RoHS legal scope)
China Rohs Regulation	China RoHS declaration
Environmental Disclosure	Product Environmental Profile
Weee	The product must be disposed on European Union markets following specific waste collection and never end up in rubbish bins
Circularity Profile	End of Life Information

Dimensions Drawings

Standard Adapter on a Typical Base

Dimensions

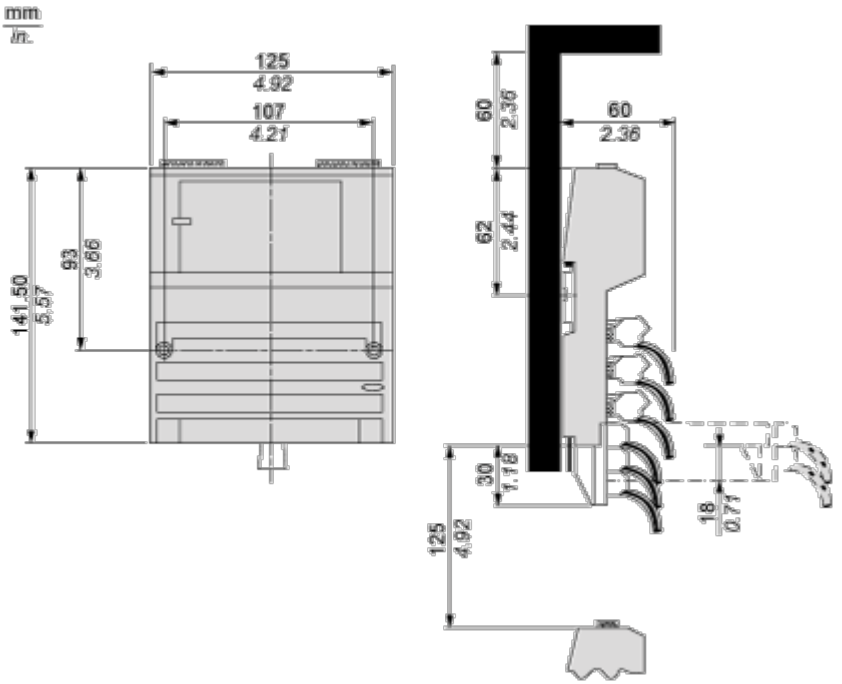

Mounting and Clearance

Mounting on a Wall

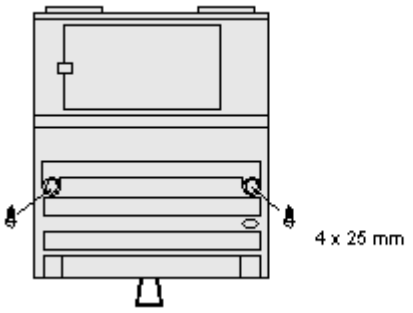

Connections and Schema

External Wiring Diagram

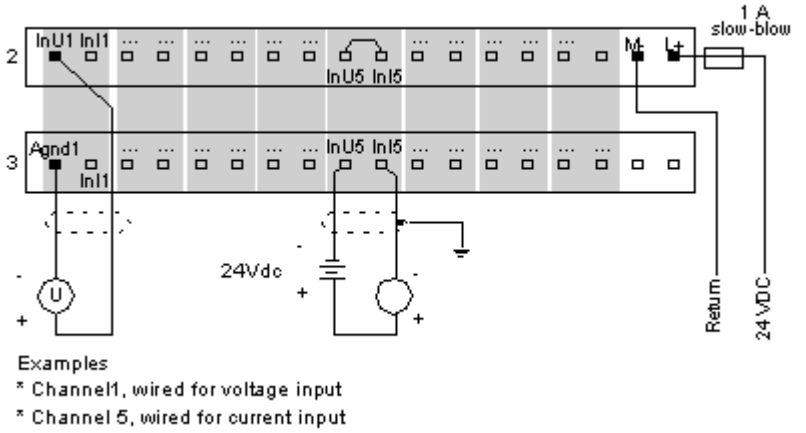
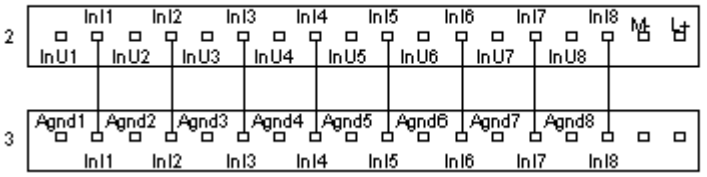
Internal Pin Connections