Product datasheet

Specifications

Green Premium™

distributed analog output Modicon Momentum - 4 Output - 4..20 mA

170AAO92100

Main

Range Of Product	Modicon Momentum automation platform
Product Or Component Type	Analogue output base

Complementary

Analogue Output Number	4
Data Format	Full 16 bits signed
Analogue Output Range	+/- 10 V 12 bits + sign >= 1 kOhm 4...20 mA 12 bits + sign <= 0.6 kOhm
Maximum Load Capacitance	1 µF
Absolute Accuracy Error	+/- 0.2 % of full scale +/- 10 V 25 °C +/- 0.25 % full scale +/- 10 V 60 °C +/- 0.4 % of full scale 4...20 mA 25 °C +/- 0.5 % of full scale 4...20 mA 60 °C
Temperature Drift	10 %oFS/°C +/- 10 V 60 °C 30 %oFS/°C 4...20 mA 60 °C
Update Time	2 ms
Full Scale	10 V +/- 10 V 2 mA 4...20 mA
Fail State	Hold Reset to full scale Reset to zero
Isolation Between Channels And Ground	500 V AC for 1 minute
Maximum Power Dissipation In W	8.5 W
Protection Type	Internal 2 A slow-blow
Output Short-Circuit Protection	With in voltage circuit
External Power Requirement	+/- 30 V DC 24 V DC
Permissible Common Mode Voltage	250 V 47...63 Hz AC between channels to ground 250 V 47...63 Hz DC
Reverse Polarity Protection	Internal
Marking	CE
Local Signalling	4 LEDs for channel status
Current Consumption	150 mA at 24 V DC actuator 530 mA at 24 V DC base
Module Format	Standard
Height	125 mm

Disclaimer: This documentation is not intended as a substitute for and is not to be used for determining suitability or reliability of these products for specific user applications

Depth	47.5 mm
Width	141.5 mm
Net Weight	0.215 kg

Environment

Product Certifications	UL CSA
Protective Treatment	TC
Resistance To Electrostatic Discharge	4 kV contact conforming to IEC 801-2 8 kV on air conforming to IEC 801-2
Resistance To Electromagnetic Fields	10 V/m 80...1000 MHz conforming to IEC 801-3
Ambient Air Temperature For Operation	0…60 °C
Ambient Air Temperature For Storage	-40…85 °C
Relative Humidity	95 % without condensation
Operating Altitude	<= 5000 m

Packing Units

Unit Type Of Package 1	PCE
Number Of Units In Package 1	1
Package 1 Height	5.5 cm
Package 1 Width	18.0 cm
Package 1 Length	26.0 cm
Package 1 Weight	375.0 g
Unit Type Of Package 2	S03
Number Of Units In Package 2	10
Package 2 Height	30 cm
Package 2 Width	30 cm
Package 2 Length	40 cm
Package 2 Weight	3.75 kg
Unit Type Of Package 3	P06
Number Of Units In Package 3	80
Package 3 Height	75.0 cm
Package 3 Width	40.0 cm
Package 3 Length	80.0 cm
Package 3 Weight	45 kg

Contractual warranty

Warranty	18 months

Sustainability

Green Premium™ label is Schneider Electric's commitment to delivering products with best-in-class environmental performance. Green Premium promises compliance with the latest regulations, transparency on environmental impacts, as well as circular and low-CO_2 products.

Guide to assessing product sustainability is a white paper that clarifies global eco-label standards and how to interpret environmental declarations.

Learn more about Green Premium >

Guide to assess a product's sustainability >

Transparency RoHS/REACh

Well-being performance

Mercury Free

Rohs Exemption Information	Yes

Certifications & Standards

Reach Regulation	REACh Declaration
Eu Rohs Directive	Pro-active compliance (Product out of EU RoHS legal scope)
China Rohs Regulation	China RoHS declaration
Environmental Disclosure	Product Environmental Profile
Weee	The product must be disposed on European Union markets following specific waste collection and never end up in rubbish bins
Circularity Profile	End of Life Information

Dimensions Drawings

Standard Adapter on a Typical Base

Dimensions

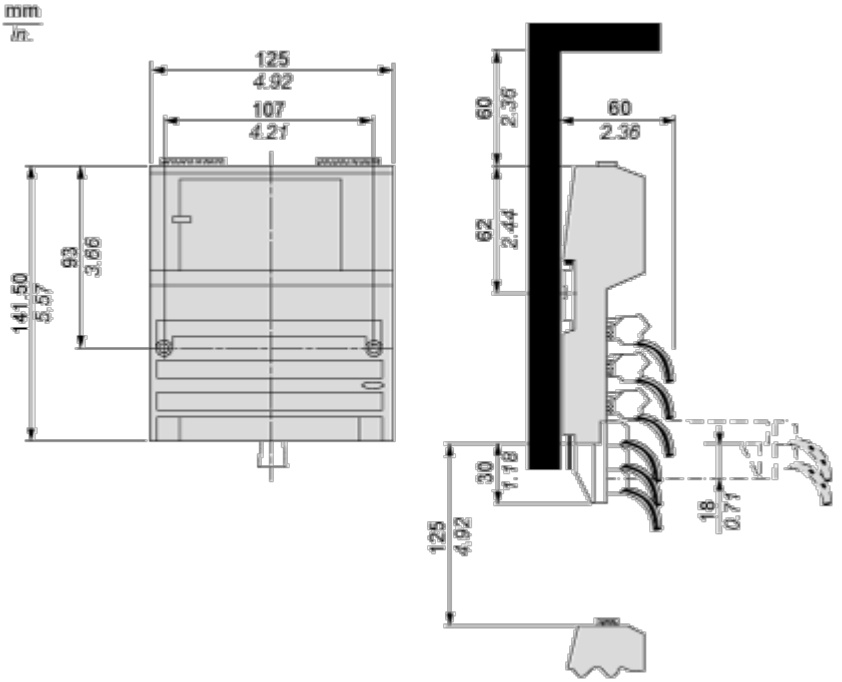

Mounting and Clearance

Mounting on a Wall

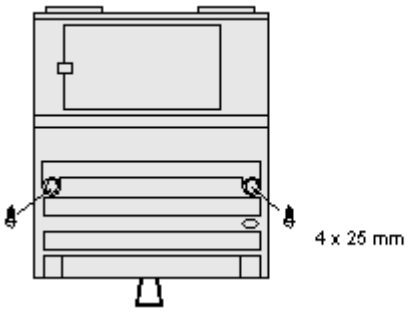

Connections and Schema

External Wiring Diagram

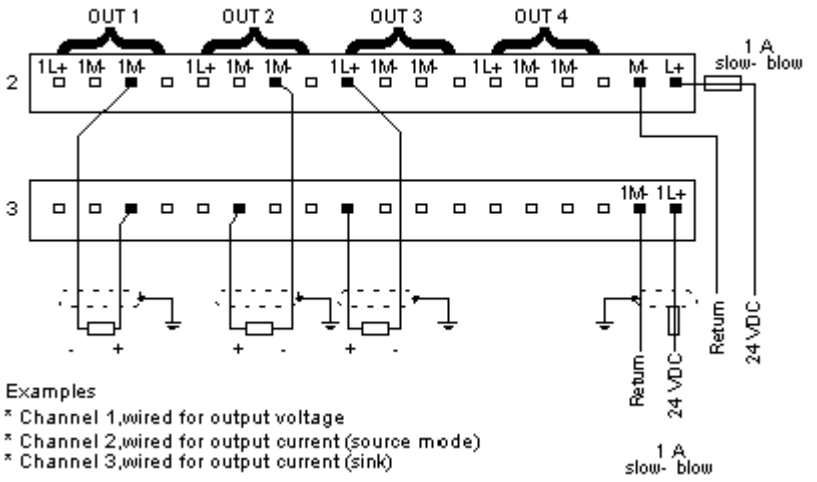
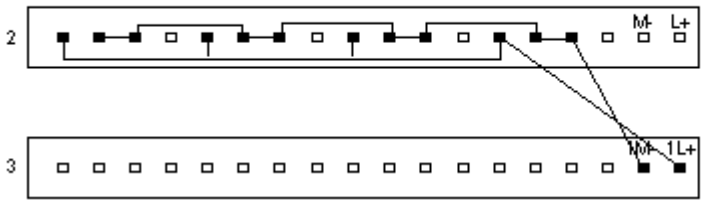
Internal Pin Connections