Product datasheet

Specifications

Green Premium™

Pilot light, Harmony 9001K, metal, polycarbonate, domed, white, 30mm, LED white, 120V

9001KP38LWW9

Main

Range Of Product	Harmony 9001K
Product Or Component Type	Pilot light
Device Short Name	9001K

Complementary

Bezel Material	Metal
Mounting Diameter	30 mm
Shape Of Signaling Unit Head	Round
Lens Type	Domed plastic
Cap/Operator Or Lens Colour	White
Light Source	White LED
Bulb Base	BA 9s
Light Block Supply	Direct 120 V AC/DC
Connections - Terminals	Screw clamp terminals, 1 x 0.22...2 x 1.5 mm² conforming to IEC 60947-1
Tightening Torque	0.8 N.m conforming to IEC 60947-1
Shape Of Screw Head	Cross slotted
Shape Of Screw Head	Cross slotted
Operating Position	Any position
[Ui] Rated Insulation Voltage	250 V (pollution degree 2) conforming to IEC 60947-1
[Uimp] Rated Impulse Withstand Voltage	2.5 kV conforming to IEC 60947-1
Short-Circuit Protection	10 A cartridge fuse conforming to IEC 60947-5-1
Light Source	LED
[Ith] Conventional Free Air Thermal Current	10 A
Cad Overall Width	54 mm
Cad Overall Height	70 mm
Cad Overall Depth	42 mm
[Us] Rated Supply Voltage	120 V AC/DC
Net Weight	0.134 kg
Device Presentation	Complete product
Lens Type	Domed
[Us] Rated Supply Voltage	120 V

Disclaimer: This documentation is not intended as a substitute for and is not to be used for determining suitability or reliability of these products for specific user applications

Light Source Colour	White
Lens Material	Polycarbonate
Size	30 mm

Environment

Standards	JIS C8201-5-1 EN/IEC 60947-5-4 JIS C 852 CSA C22.2 No 14 UL 508 EN/IEC 60947-1 EN/IEC 60947-5-1 JIS C8201-1
Product Certifications	UL 508 NEMA
Protective Treatment	TC
Ambient Air Temperature For Storage	-40…70 °C
Ambient Air Temperature For Operation	-25…70 °C
Vibration Resistance	7 gn (f= 2…500 Hz) conforming to IEC 60068-2-6
Shock Resistance	50 gn conforming to IEC 60068-2-27
Overvoltage Category	Class II conforming to IEC 61140
Ip Degree Of Protection	IP66 conforming to IEC 60529
Nema Degree Of Protection	NEMA 1 NEMA 12 NEMA 13 NEMA 2 NEMA 3 NEMA 3R NEMA 4 NEMA 6

Packing Units

Unit Type Of Package 1	PCE
Number Of Units In Package 1	1
Package 1 Height	4.600 cm
Package 1 Width	5.700 cm
Package 1 Length	9.200 cm
Package 1 Weight	145.000 g
Unit Type Of Package 2	S01
Number Of Units In Package 2	24
Package 2 Height	15.000 cm
Package 2 Width	15.000 cm
Package 2 Length	40.000 cm
Package 2 Weight	3.657 kg

Contractual warranty

Warranty	18 months

Sustainability

Green Premium™ label is Schneider Electric's commitment to delivering products with best-in-class environmental performance. Green Premium promises compliance with the latest regulations, transparency on environmental impacts, as well as circular and low-CO_2 products.

Guide to assessing product sustainability is a white paper that clarifies global eco-label standards and how to interpret environmental declarations.

Learn more about Green Premium >

Guide to assess a product's sustainability >

Transparency RoHS/REACh

Well-being performance

Mercury Free

Rohs Exemption Information	Yes

Certifications & Standards

Reach Regulation	REACh Declaration
Eu Rohs Directive	Pro-active compliance (Product out of EU RoHS legal scope)
China Rohs Regulation	China RoHS declaration
Environmental Disclosure	Product Environmental Profile
Weee	The product must be disposed on European Union markets following specific waste collection and never end up in rubbish bins
Circularity Profile	No need of specific recycling operations

Dimensions Drawings

Dimensions

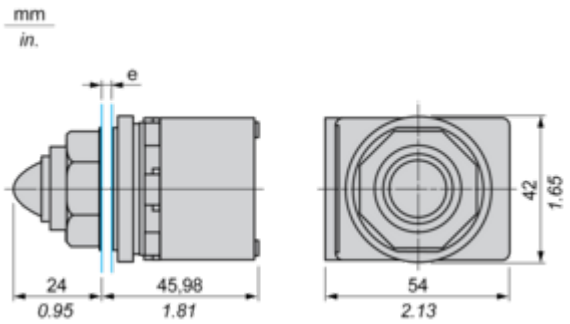

e panel thickness: 1 to 6 mm / 0.04 to 0.24 in.