Product datasheet

Specifications

Green Premium™

Head for spring return push button, Harmony 9001K, metal, flush, 7 colours choice, 30mm

9001KR1U

Main

Range Of Product	Harmony 9001K
Product Or Component Type	Head for push-button
Device Short Name	9001K
Operator Profile	flush, unmarked
Operator Additional Information	Metal guard

Complementary

Mounting Diameter	30 mm
Shape Of Signaling Unit Head	Round
Type Of Operator	spring return
Net Weight	0.087 kg
Bezel Material	Metal
Cap/Operator Or Lens Colour	7 colours choice
Operator Profile	Flush
Type Of Operator	Spring return
Contacts Type And Composition	Without contact block

Packing Units

Unit Type Of Package 1	PCE
Number Of Units In Package 1	1
Package 1 Height	9.500 cm
Package 1 Width	5.500 cm
Package 1 Length	5.000 cm
Package 1 Weight	102.000 g
Unit Type Of Package 2	S01
Number Of Units In Package 2	24
Package 2 Height	15.000 cm
Package 2 Width	15.000 cm
Package 2 Length	40.000 cm
Package 2 Weight	2.622 kg

Contractual warranty

Disclaimer: This documentation is not intended as a substitute for and is not to be used for determining suitability or reliability of these products for specific user applications

Warranty	18 months

Sustainability

Green Premium™ label is Schneider Electric's commitment to delivering products with best-in-class environmental performance. Green Premium promises compliance with the latest regulations, transparency on environmental impacts, as well as circular and low-CO_2 products.

Guide to assessing product sustainability is a white paper that clarifies global eco-label standards and how to interpret environmental declarations.

Learn more about Green Premium >

Guide to assess a product's sustainability >

Transparency RoHS/REACh

Well-being performance

Mercury Free

Rohs Exemption Information Yes

Certifications & Standards

Reach Regulation	REACh Declaration
Eu Rohs Directive	Pro-active compliance (Product out of EU RoHS legal scope)
China Rohs Regulation	China RoHS declaration
Environmental Disclosure	Product Environmental Profile
Weee	The product must be disposed on European Union markets following specific waste collection and never end up in rubbish bins
Circularity Profile	No need of specific recycling operations

Dimensions Drawings

Dimensions

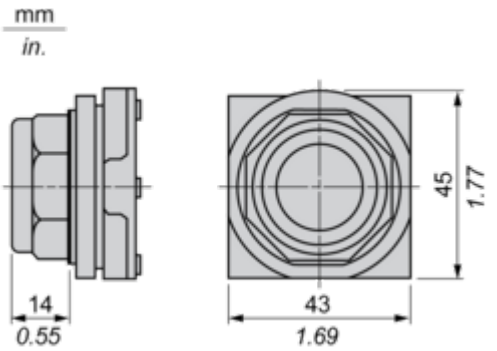

Mounting and Clearance

Contact Block Mounting Position

Top and Rear views

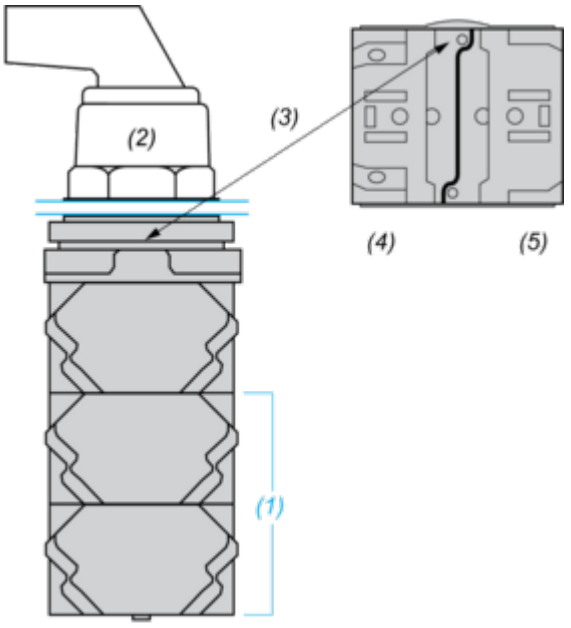

(1) It is possible to mount up to 3 levels of contacts blocks (maximum of 6 contacts blocks)
(2) Operator
(3) Locating notch
(4) Side 1
(5) Side 2

Panel Cut-Out

Clearance

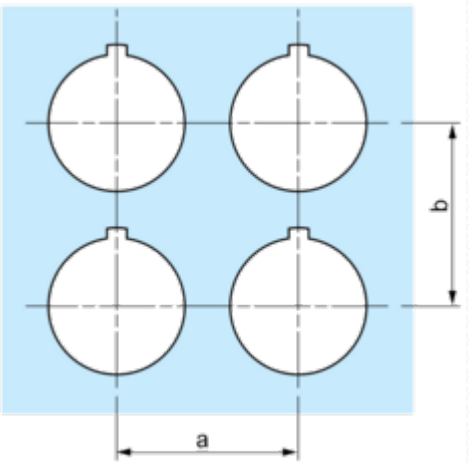

Legend plate	a min.		b min.	
	mm	in.	mm	in.
9001KN2••	57.2	2.25	44.5	1.75
9001KN3••	57.2	2.25	50.8	2.00

Individual Cut-outs Details
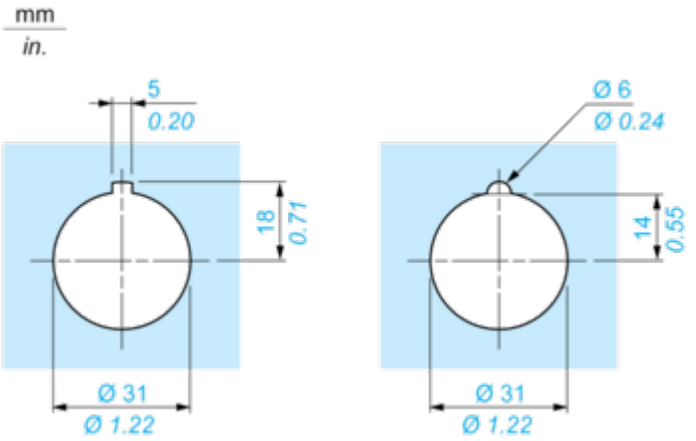
2 alternatives