Product datasheet

Specifications

connection sub-base ABE7 - for counter and analog channels

ABE7CPA01

Main

Range Of Product	Modicon ABE7
Product Or Component Type	Connection sub-base for counter and analogue channels
Number Of Channels	2 8 1
Connections - Terminals	Screw type terminals, 1 x 0.09...1 x 1.5 mm² (AWG 28...AWG 16) flexible with cable end Screw type terminals, 1 x 0.14...1 x 2.5 mm² (AWG 26...AWG 12) solid Screw type terminals, 1 x 0.14...1 x 2.5 mm² (AWG 26...AWG 14) flexible without cable end Screw type terminals, 2 x 0.09...2 x 0.75 mm² (AWG 28...AWG 20) flexible with cable end Screw type terminals, 2 x 0.2...2 x 2.5 mm² (AWG 24...AWG 14) solid

Complementary

Function Of Module	Counting and analogue, compatible with TSX Micro Counting, axis control, position control, compatible with Premium
Product Compatibility	TSX Micro TSX3722 Premium TSXCAY21 Premium TSXCAY41 Premium TSXCTY2A Premium TSXCTY4A TSX Micro TSXCTZ1A TSX Micro TSXCTZ2A
[Uc] Control Circuit Voltage	24 V DC
Connection To Plc	SUB-D 15
Fixing Mode	By clips (35 mm symmetrical DIN rail) By screws (solid plate with fixing kit)
[Ui] Rated Insulation Voltage	2000 V terminals/mounting rails
Installation Category	II conforming to IEC 60664-1
Tightening Torque	0.6 N.m with flat Ø 3.5 mm screwdriver
Net Weight	0.3 kg

Environment

Product Certifications	DNV CSA UL GL EAC
Ip Degree Of Protection	IP20 conforming to IEC 60529
Resistance To Incandescent Wire	750 °C conforming to IEC 60695-2-11
Shock Resistance	15 gn for 11 ms conforming to IEC 60068-2-27

Disclaimer: This documentation is not intended as a substitute for and is not to be used for determining suitability or reliability of these products for specific user applications

Vibration Resistance	2 gn (f= 10…150 Hz) conforming to IEC 60068-2-6
Resistance To Electrostatic Discharge	4 kV (contact) level 3 conforming to IEC 61000-4-2 8 kV (air) level 3 conforming to IEC 61000-4-2
Resistance To Radiated Fields	10 V/m (26000000…1000000000 Hz) conforming to IEC 61000-4-3 level 3
Resistance To Fast Transients	2 kV level 3 conforming to IEC 61000-4-4
Ambient Air Temperature For Operation	0…60 °C
Ambient Air Temperature For Storage	-40…80 °C conforming to IEC 61131-2
Pollution Degree	2 conforming to IEC 60664-1

Packing Units

Unit Type Of Package 1	PCE
Number Of Units In Package 1	1
Package 1 Height	6.5 cm
Package 1 Width	7.7 cm
Package 1 Length	15.7 cm
Package 1 Weight	325.0 g
Unit Type Of Package 2	S03
Number Of Units In Package 2	24
Package 2 Height	30.0 cm
Package 2 Width	30.0 cm
Package 2 Length	40.0 cm
Package 2 Weight	8.352 kg

Contractual warranty

Warranty	18 months

Sustainability

Green Premium™ label is Schneider Electric's commitment to delivering products with best-in-class environmental performance. Green Premium promises compliance with the latest regulations, transparency on environmental impacts, as well as circular and low-CO_2 products.

Guide to assessing product sustainability is a white paper that clarifies global eco-label standards and how to interpret environmental declarations.

Learn more about Green Premium >

Guide to assess a product's sustainability >

Transparency RoHS/REACh

Well-being performance

Mercury Free

Rohs Exemption Information	Yes

Certifications & Standards

Reach Regulation	REACh Declaration
Eu Rohs Directive	Pro-active compliance (Product out of EU RoHS legal scope)
China Rohs Regulation	China RoHS declaration
Environmental Disclosure	Product Environmental Profile
Weee	The product must be disposed on European Union markets following specific waste collection and never end up in rubbish bins
Circularity Profile	End of Life Information

Dimensions Drawings

Dimensions

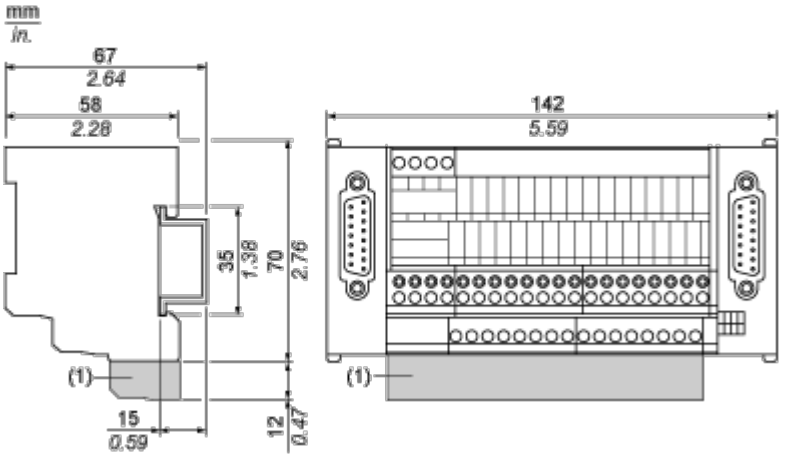

(1) ABE7BV10 / ABE7BV20

Mounting and Clearance

Mounting

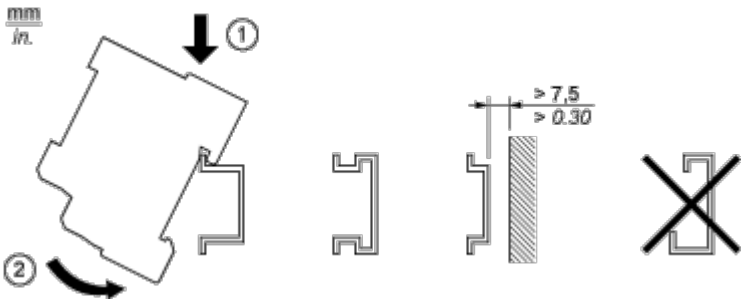

Connections and Schema
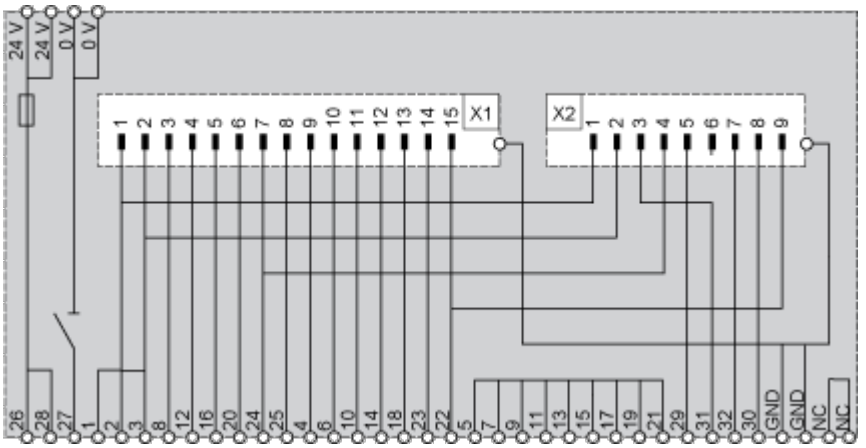
Wiring Diagram