Product datasheet

Specifications

Green Premium™

sub-base - soldered electromechanical relays ABE7 - 8 channels - relay 10 mm

ABE7R08S210

Main

Range Of Product	Modicon ABE7
Product Or Component Type	Electromechanical output relay sub-base
[Us] Rated Supply Voltage	24 V DC for PLC end
Number Of Channels	8
Number Of Terminal Per Channel	2

Complementary

Terminal Block Type	Removable
Polarity Distribution	Volt-free
Fixing Mode	By clips (35 mm symmetrical DIN rail) By screws (solid plate with fixing kit)
Maximum Current Per Output Common	10 A
Current Per Channel	5 A for preactuator end
Minimum Switching Current	10 mA at >= 5 V
Drop-Out Voltage	2.4 V at 20 °C (PLC end)
Switching Frequency	<= 0.5 Hz <= 10 Hz
Threshold Tripping Voltage	19.7 V at 40 °C
Drop-Out Current	1 mA at 20 °C
Maximum Power Dissipation Per Channel In W	0.36 W (PLC end)
Contacts Type And Composition	1 NO for preactuator end
Maximum Switching Voltage	250 V AC 50/60 Hz conforming to IEC 60947-5-1 30 V DC conforming to IEC 60947-5-1
Electrical Durability	500000 cycles, maximum switching current: 600 mA at 24 V DC-13 10 ms (preactuator end) 500000 cycles, maximum switching current: 1500 mA at 230 V AC-12 (preactuator end) 500000 cycles, maximum switching current: 1500 mA at 24 V DC-12 (preactuator end) 500000 cycles, maximum switching current: 900 mA at 230 V AC-15 (preactuator end)
Electrical Reliability	1e-008
Operating Time	<= 10 ms coil energisation and NO closing <= 5 ms coil de-energisation and NO opening
Contact Bounce Time	<= 5 ms 1 NO
Operating Rate In Hz	10 Hz no load 0.5 Hz at Ie

Disclaimer: This documentation is not intended as a substitute for and is not to be used for determining suitability or reliability of these products for specific user applications

Mechanical Durability	20000000 cycles
[Uimp] Rated Impulse Withstand Voltage	2.5 kV conforming to IEC 60947-1
[Ui] Rated Insulation Voltage	2000 V
Installation Category	II conforming to IEC 60664-1
Tightening Torque	0.6 N.m with flat Ø 3.5 mm screwdriver
Width	125 mm
Net Weight	0.448 kg

Environment

Max Immunity To Microbreaks	5 ms
Dielectric Strength	2000 V conforming to IEC 60947-1
Product Certifications	UL DNV CSA GL EAC
Ip Degree Of Protection	IP2X conforming to IEC 60529
Protective Treatment	TC
Resistance To Incandescent Wire	750 °C, extinction time <30 s conforming to IEC 60695-2-11
Shock Resistance	15 gn for 11 ms conforming to IEC 60068-2-27
Resistance To Radiated Fields	10 V/m (26000000…1000000000 Hz) conforming to IEC 61000-4-3 level 3
Resistance To Fast Transients	2 kV level 3 conforming to IEC 61000-4-4
Ambient Air Temperature For Operation	-5…60 °C conforming to IEC 61131-2
Ambient Air Temperature For Storage	-40…80 °C conforming to IEC 61131-2
Pollution Degree	2 conforming to IEC 60664-1

Packing Units

Unit Type Of Package 1	PCE
Number Of Units In Package 1	1
Package 1 Height	7.200 cm
Package 1 Width	8.200 cm
Package 1 Length	13.700 cm
Package 1 Weight	351.000 g
Unit Type Of Package 2	S02
Number Of Units In Package 2	9
Package 2 Height	15.000 cm
Package 2 Width	30.000 cm
Package 2 Length	40.000 cm
Package 2 Weight	3.572 kg

Contractual warranty

Warranty	18 months

Sustainability

Green Premium™ label is Schneider Electric's commitment to delivering products with best-in-class environmental performance. Green Premium promises compliance with the latest regulations, transparency on environmental impacts, as well as circular and low-CO_2 products.

Guide to assessing product sustainability is a white paper that clarifies global eco-label standards and how to interpret environmental declarations.

Learn more about Green Premium >

Guide to assess a product's sustainability >

Transparency RoHS/REACh

Well-being performance

Mercury Free

Rohs Exemption Information	Yes

Certifications & Standards

Reach Regulation	REACh Declaration
Eu Rohs Directive	Pro-active compliance (Product out of EU RoHS legal scope)
China Rohs Regulation	China RoHS declaration
Environmental Disclosure	Product Environmental Profile
Weee	The product must be disposed on European Union markets following specific waste collection and never end up in rubbish bins
Circularity Profile	End of Life Information

Dimensions Drawings

Dimensions

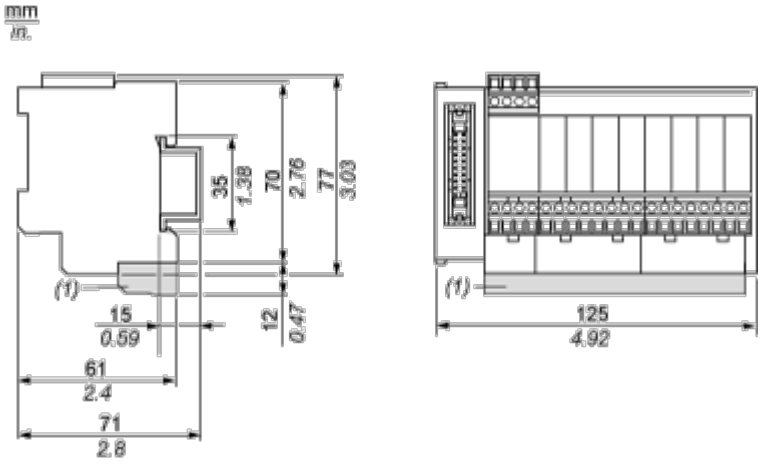

(1) ABE7BV10 / ABE7BV10E

Mounting and Clearance

Mounting

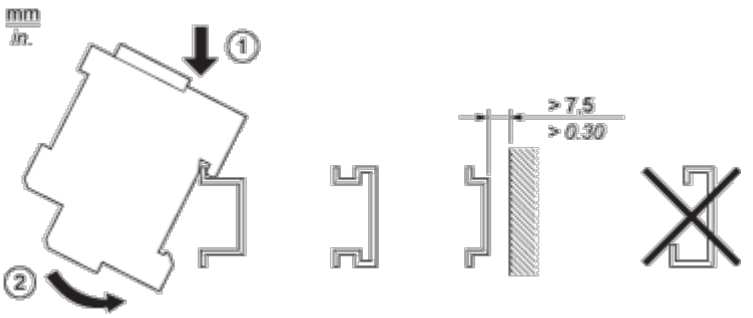

Connections and Schema

HE10 8 Channels

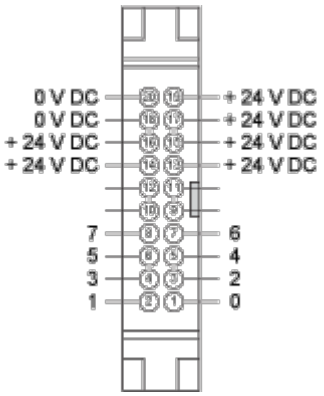

Wiring Diagram

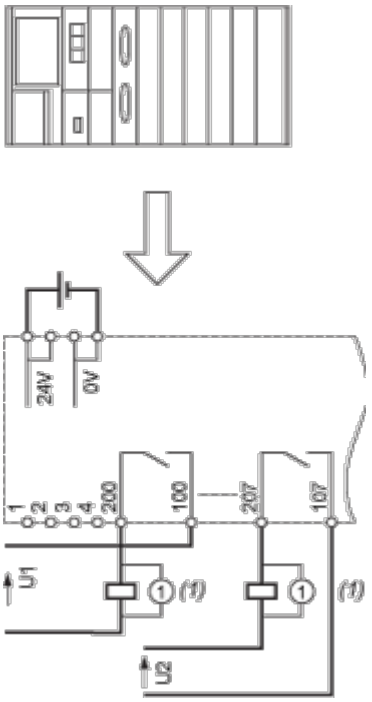

(1) Inductive load

Performance Curves

Curves for Determining Cable Type and Length According to the Current

8-channel Sub-base

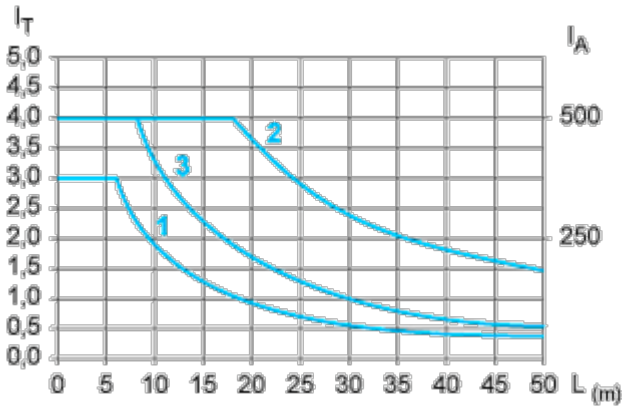

L Cable length

I_T Total current per sub base (A)

I_A Average current per channel (mA)

(1) TSXCDP••2 and ABFH20H••0 cables with c.s.a. 0.08 mm^2 (AWG 28).

(2) TSXCDP••3 cables with c.s.a. 0.34 mm^2 (AWG 22).

(3) Cables with c.s.a. 0.13 mm^2 (AWG 26).

The curves are given for a voltage drop of 1 V in the cable. For n volts tolerance, multiply the length determined from the graph by n.

Electrical Durability (in Millions of Operating Cycles) Conforming to IEC 60947-5-1

DC Loads

DC12 curves

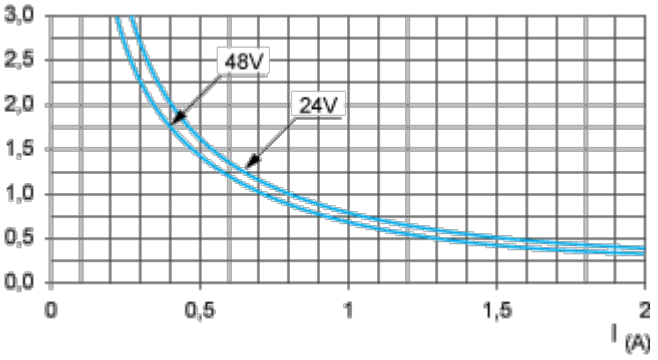

DC12 control of resistive loads and of solid state loads isolated by optocoupler, l/R ≤ 1 ms.

DC13 curves

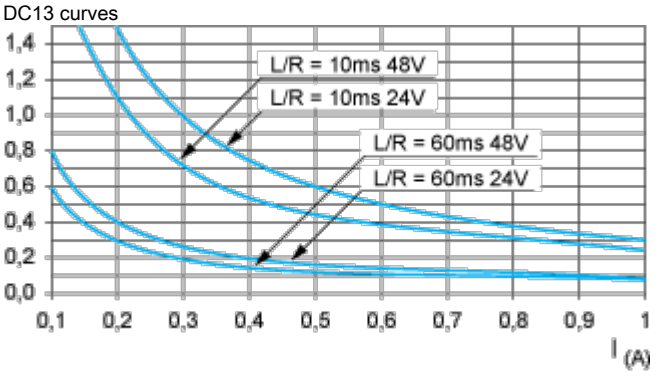

DC13 switching electromagnets, L/R ≤ 2 x (Ue x Ie) in ms, Ue: rated operational voltage, Ie: rated operational current (with a protective diode on the load, DC12 curves must be used with a coefficient of 0.9 applied to the number in millions of operating cycles)

AC Loads

AC12 curves

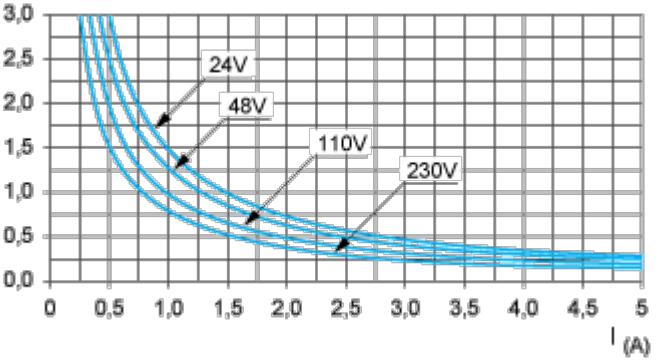

AC12 control of resistive loads and of solid state loads isolated by optocoupler, cos ϕ ≥ 0.9.

AC14 curves

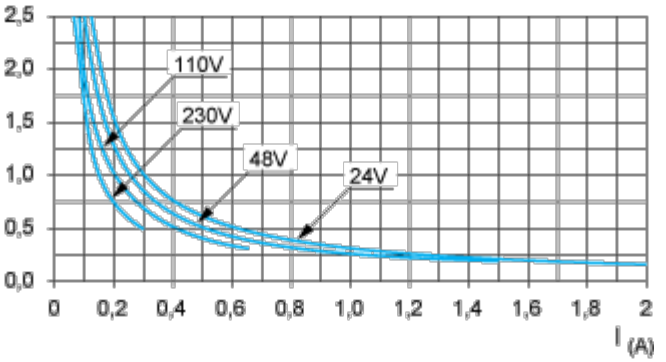

AC14 control of small electromagnetic loads ≤ 72 VA, make: cos ϕ = 0.3, break: cos ϕ = 0.3.

AC15 curves

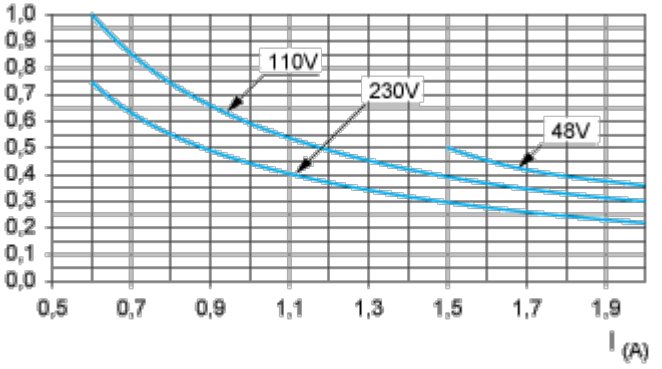

AC15 control of electromagnetic loads > 72 VA, make: cos ϕ = 0.7, break: cos ϕ = 0.4.