Product datasheet

Specifications

Green Premium™

Regulated Power Supply, modicon power supply, 100...240V AC, 24V, 10A, single phase, Panel Mount

ABLP1A24100

Main

Range Of Product	Modicon Power Supply
Product Or Component Type	Power supply
Power Supply Type	Regulated switch mode
Variant Option	Panel mount
Enclosure Material	Aluminium
Nominal Input Voltage	100...240 V AC single phase
Rated Power In W	240 W
Output Voltage	24 V DC
Power Supply Output Current	10 A

Complementary

Input Voltage Limits	85...264 V AC
Nominal Network Frequency	50…60 Hz
Network System Compatibility	TN TT IT
Maximum Leakage Current	1 mA 240 V AC
Input Protection Type	Integrated fuse (not interchangeable) 6.3 A
Inrush Current	35 A at 115 V 60 A at 230 V
Power Factor	0.95 at 115 V AC 0.91 at 230 V AC
Efficiency	87 % at 230 V AC
Output Voltage Adjustment	21.6...26.4 V
Power Dissipation In W	36 W
Current Consumption	< 3.6 A 115 V AC < 1.8 A 230 V AC
Turn-On Time	< 1.2 s
Holding Time	> 20 ms 115 V AC > 40 ms 230 V AC
Startup With Capacitive Loads	8000 µF
Residual Ripple	< 150 mV
Meantime Between Failure [Mtbf]	700000 h at 25 °C, full load conforming to SR 332

Disclaimer: This documentation is not intended as a substitute for and is not to be used for determining suitability or reliability of these products for specific user applications

Output Protection Type	Against overload and short-circuits, protection technology: automatic reset Against over temperature, protection technology: manual reset Against overvoltage, protection technology: manual reset
Connections - Terminals	Screw connection: 0.75...2.5 mm², (AWG 18...AWG 14) without wire end ferrule Screw connection: 0.75...1.5 mm², (AWG 18...AWG 16) with wire end ferrule
Line And Load Regulation	< 0.5 % at 0 to 100 % load at 25 °C < 1 % at full voltage range in line at 25 °C
Status Led	1 LED (green) output voltage
Depth	190 mm
Height	50 mm
Width	93 mm
Net Weight	0.85 kg
Output Coupling	Parallel Serial
Mounting Support	Top hat type TH35-15 rail conforming to IEC 60715 Top hat type TH35-7.5 rail conforming to IEC 60715 Double-profile DIN rail panel mounting
Supply	SELV conforming to IEC 60950-1 SELV conforming to IEC 60204-1 SELV conforming to IEC 60364-4-41
Dielectric Strength	3000 V AC with input to output
Service Life	10 year(s)
Overvoltage Category	II

Environment

Standards	IEC 62368-1 EN/IEC 61010-1 EN 61010-2-201 EN/IEC 61204-3 IEC 61000-6-1 IEC 61000-6-2 IEC 61000-6-3 IEC 61000-6-4 IEC 61000-3-2 EN 61000-3-3 UL 62368-1 UL 61010-1 UL 61010-2-201 CSA C22.2 No 62368-1 CSA C22.2 No 61010-1 CSA C22.2 No 61010-2-201 IEC 60335-1 EN/IEC 62368-1
Product Certifications	CE CULus EAC RCM CB Scheme KC
Operating Altitude	5000 m
Shock Resistance	150 m/s² for 11 ms
Ip Degree Of Protection	IP10
Ambient Air Temperature For Operation	-10…50 °C without derating mounting position A, B, C, D, F, G < 2000 m 50…70 °C with current derating of 2.5 % per °C mounting position A, B, C, D, F, G < 2000 m 50…70 °C with current derating of 2.5 % per ××C < 2000 m
Electrical Shock Protection Class	Class I

Pollution Degree	2
Vibration Resistance	3 mm (f= 2…9 Hz) conforming to IEC 60068-2-6 10 m/s² (f= 9…200 Hz) conforming to IEC 60068-2-6
Electromagnetic Immunity	Immunity to electrostatic discharge - test level: 8 kV (contact discharge) conforming to IEC 61000-4-2 Immunity to electrostatic discharge - test level: 15 kV (air discharge) conforming to IEC 61000-4-2 Immunity to conducted RF disturbances - test level: 15 V/m (80 MHz...2 GHz) conforming to IEC 61000-4-3 Immunity to conducted RF disturbances - test level: 5 V/m (2...2.7 GHz) conforming to IEC 61000-4-3 Immunity to conducted RF disturbances - test level: 5 V/m (2.7...6 GHz) conforming to IEC 61000-4-3 Immunity to fast transients - test level: 4 kV (on input-output) conforming to IEC 61000-4-4 Surge immunity test - test level: 4 kV (between power supply and earth) conforming to IEC 61000-4-5 Surge immunity test - test level: 3 kV (between phases) conforming to IEC 61000-4-5 Immunity to conducted RF disturbances - test level: 15 V (0.15...80 MHz) conforming to IEC 61000-4-6 Immunity to magnetic fields - test level: 30 A/m (50...60 Hz) conforming to IEC 61000-4-8 Immunity to voltage dips conforming to IEC 61000-4-11 Disturbing field emission conforming to EN 55016-2-3 Limits for harmonic current emissions conforming to IEC 61000-3-2 conforming to EN 55016-1-2 conforming to EN 55016-2-1
Electromagnetic Emission	Conducted emissions conforming to IEC 61000-6-3 Radiated emissions conforming to IEC 61000-6-4

Packing Units

Unit Type Of Package 1	PCE
Number Of Units In Package 1	1
Package 1 Height	6.000 cm
Package 1 Width	14.000 cm
Package 1 Length	24.500 cm
Package 1 Weight	984.000 g
Unit Type Of Package 2	S03
Number Of Units In Package 2	9
Package 2 Height	30.000 cm
Package 2 Width	30.000 cm
Package 2 Length	40.000 cm
Package 2 Weight	9.269 kg
Unit Type Of Package 3	P06
Number Of Units In Package 3	72
Package 3 Height	75.000 cm
Package 3 Width	80.000 cm
Package 3 Length	60.000 cm
Package 3 Weight	82.152 kg

Sustainability

Green Premium™ label is Schneider Electric's commitment to delivering products with best-in-class environmental performance. Green Premium promises compliance with the latest regulations, transparency on environmental impacts, as well as circular and low-CO_2 products.

Guide to assessing product sustainability is a white paper that clarifies global eco-label standards and how to interpret environmental declarations.

Learn more about Green Premium >

Guide to assess a product's sustainability >

Transparency RoHS/REACh

Well-being performance

Mercury Free

Rohs Exemption Information	Yes

Certifications & Standards

Reach Regulation	REACh Declaration
Eu Rohs Directive	Pro-active compliance (Product out of EU RoHS legal scope)
China Rohs Regulation	China RoHS declaration
Environmental Disclosure	Product Environmental Profile
Weee	The product must be disposed on European Union markets following specific waste collection and never end up in rubbish bins
Circularity Profile	End of Life Information

Dimensions Drawings

Electrical Safety

- If the unit is use in a manner not specified by the manufacturer, the protection provided by the equipment may be impaired.
- For means of disconnection a switch or circuit breaker, located near the product, must be included in the installation. A marking as disconnecting device for the product is required.
- The device has an internal fuse. The unit is tested and approved with branch circuit protective device up to 20A. This circuit breaker can be used as disconnecting device.
- The power supply is only suitable for audio, video, information, communication, industrial and control equipment.

Dimensions

Front and Side Views

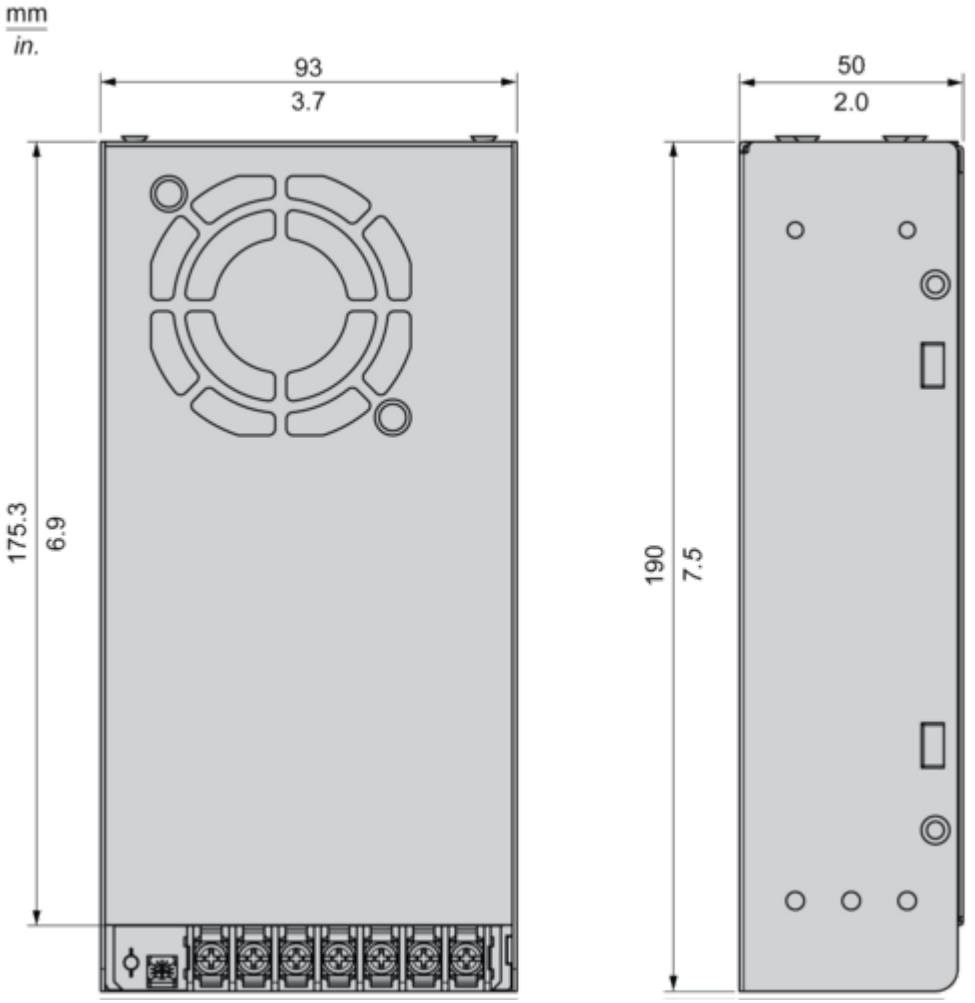

Connections and Schema

Connections and Schema

Correct Parallel Connection

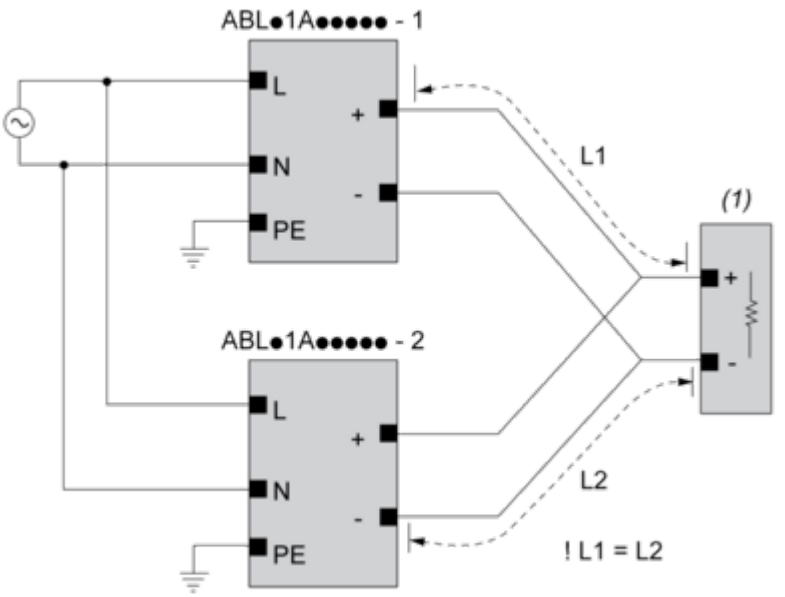

(1) : Load

Incorrect Parallel Connection

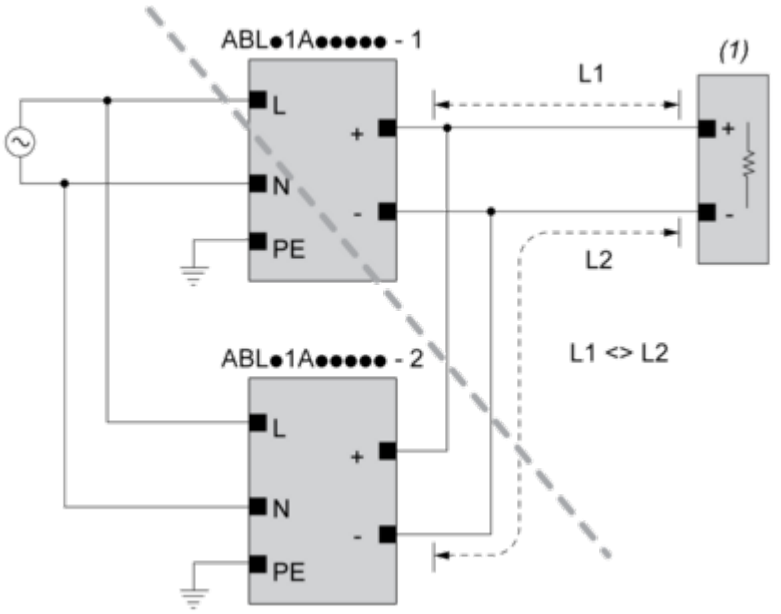

(1) : Load
ABLx1Axxxxx-1 = ABLx1Axxxxx-2
max 2 x ABLx1Axxxxx
L1 = L2
ΔV max 25 mV
I_{Load} < 90% 2 x I_{nom}

Output Voltage Balancing

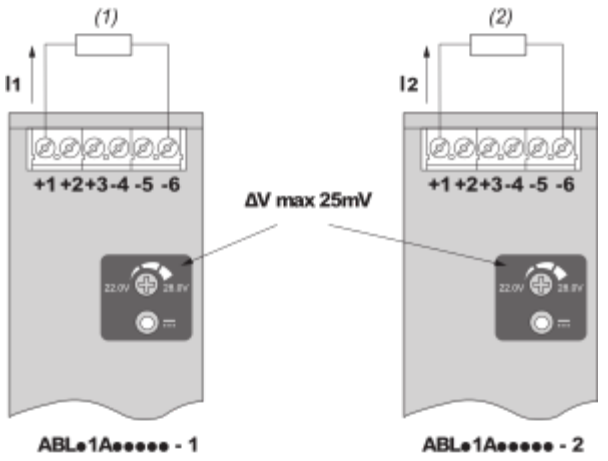

(1) : R_{Load1}
(2) : R_{Load2}
$R_{Load1} = R_{Load2}$
$I_1 = I_2 = \sim I_{nom}$

Series Connection

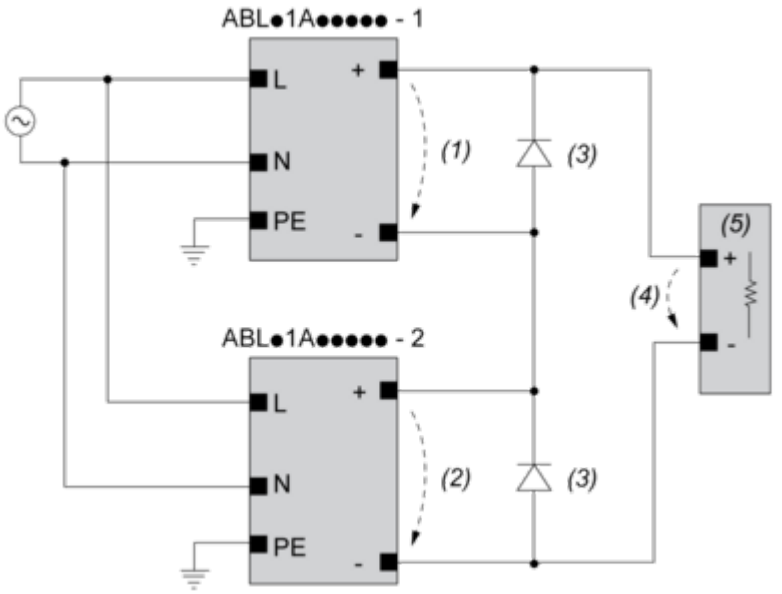

(1) : V_{out1}
(2) : V_{out2}
(3) : 2 x Diode, $V_{RRM} > 2 \times V_{out1/2}$, $I_F > 2 \times I_{nom1/2}$
(4) : $V_{Load} = 2 \times V_{out}$
(5) : Load

Connections and Schema

	(1)		
	<40ºC	<50ºC	<70ºC
ABLP1A12085	60ºC	70ºC	90ºC
ABLP1A24045	60ºC	70ºC	90ºC
ABLP1A24062	60ºC	70ºC	90ºC
ABLP1A24100	60ºC	70ºC	90ºC

(1) : Ambient

Mounting and Clearance

Mounting

Mounting Position A

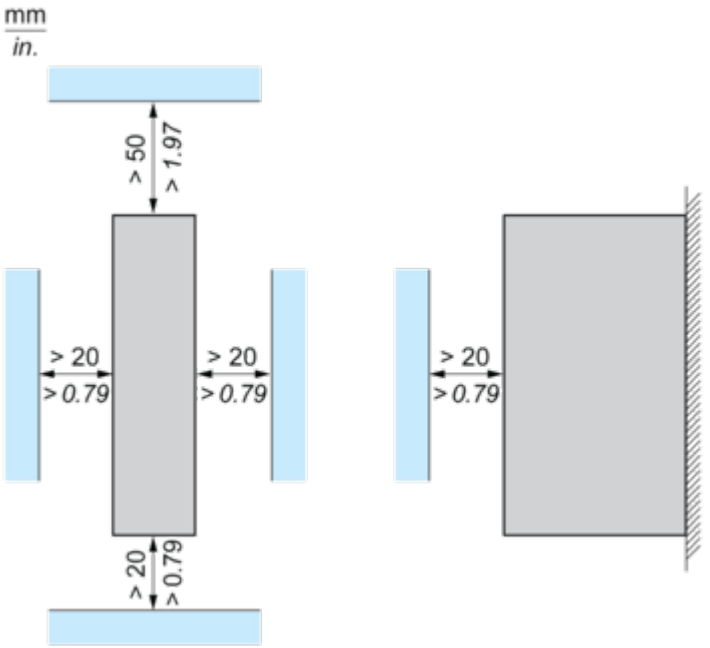

Mounting Position B

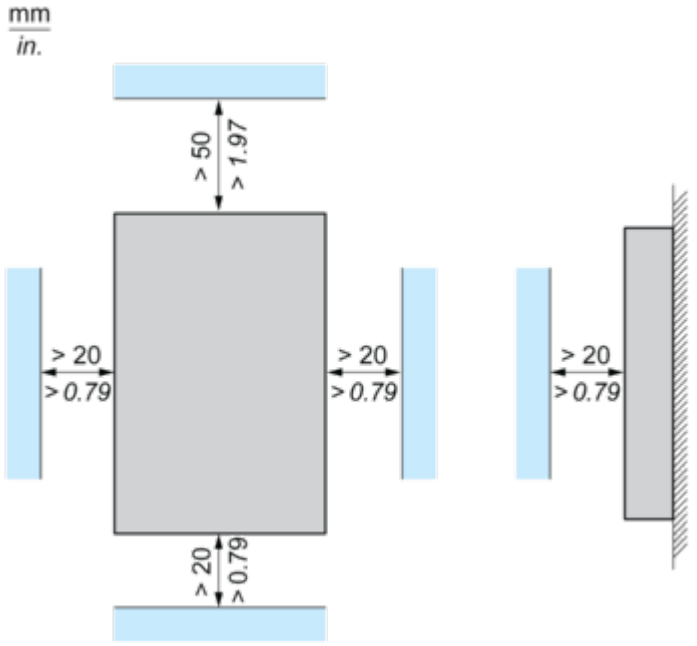

Mounting Position C

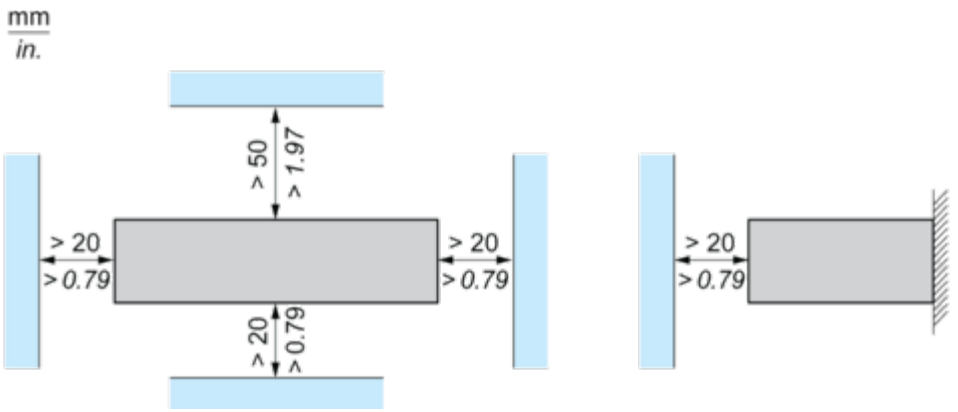

Mounting Position D1

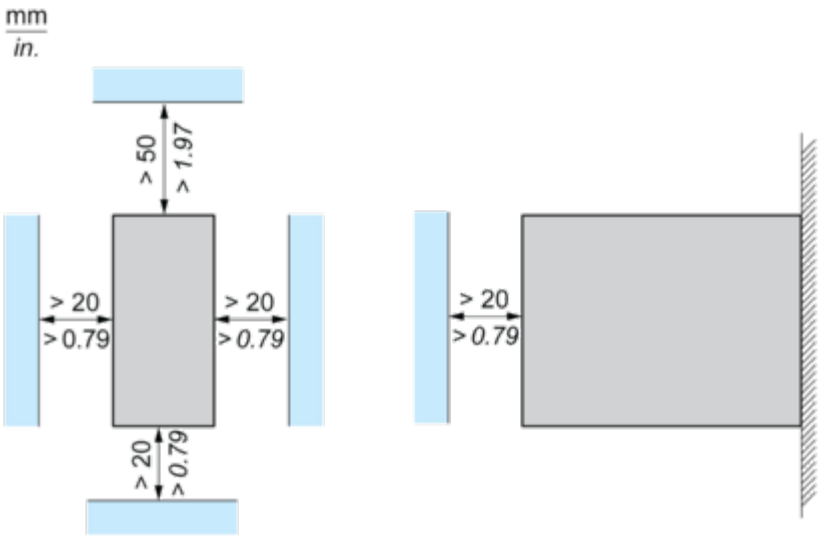

Mounting Position D2 and F

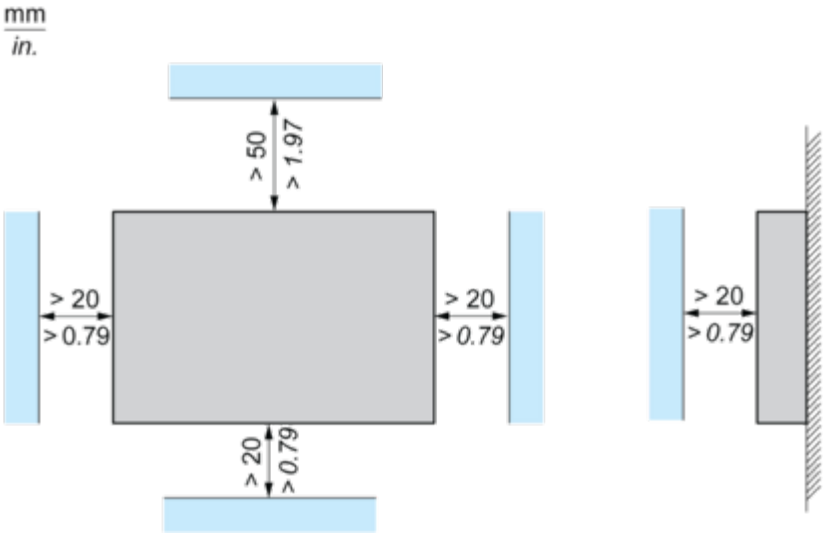

Mounting Position G

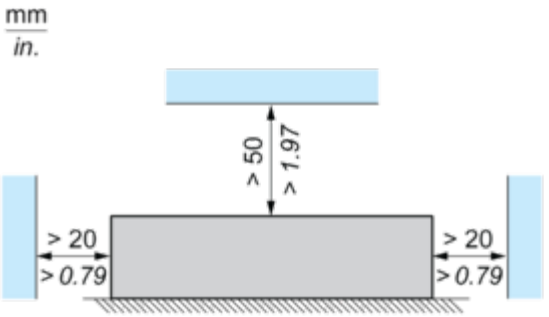
mm
in.
> 50
> 1.97
> 20
> 0.79
> 20
> 0.79

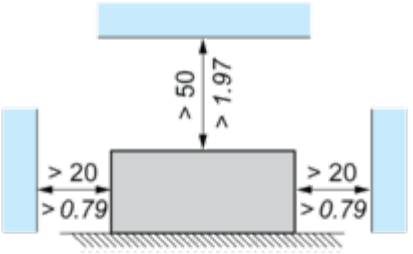
> 50
> 1.97
> 20
> 0.79
> 20
> 0.79

Performance Curves

Performance Curves

Mounting Positions A, B, C, D, F and G

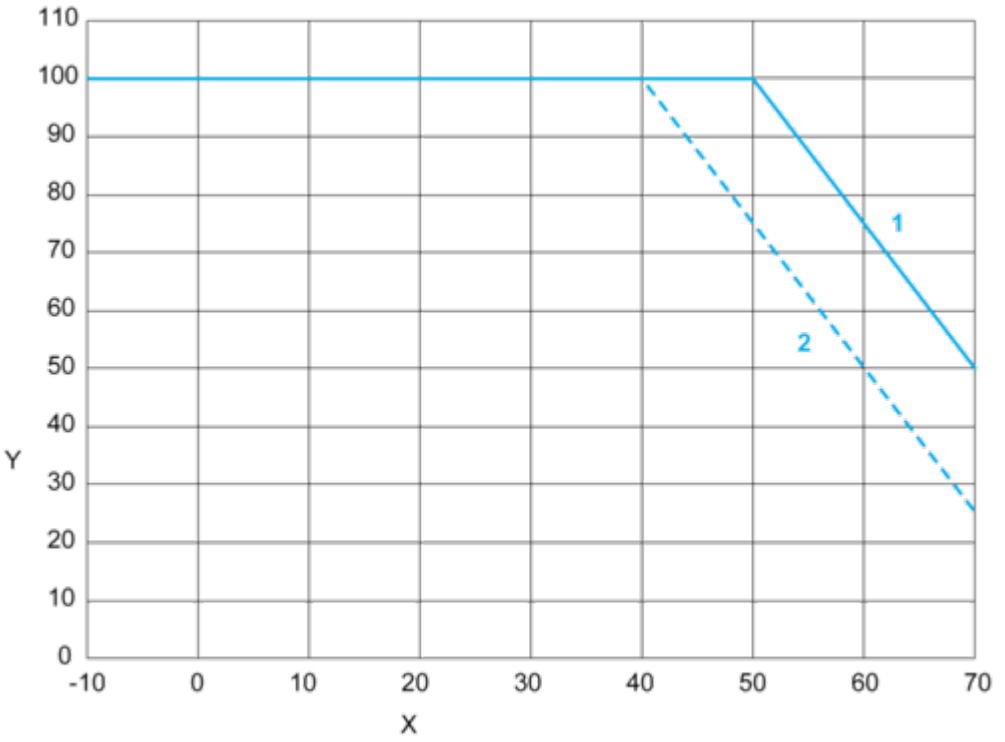

X : Surrounding Air Temperature (°C)
Y : Percentage of Max Load (%)
1 : Altitude 2000 m
2 : Altitude 5000 m
Note : < 100 VAC additional derating by 1.33% / VAC