Product datasheet

Specifications

remote IO drop E/IP, Modicon X80, performance, service port, advanced features, coated

BMXCRA31210C

Main

Range Of Product	Modicon X80
Range Compatibility	Modicon M580 Modicon Quantum
Product Or Component Type	Ethernet I/O head module
Device Application	X80 Ethernet RIO drop adaptor
Product Specific Application	For remote I/O modules

Complementary

Bus Type	Bus X across the remote backplane
Number Of Port	3
Integrated Connection Type	1 port for service or distributed equipment 2 port for Ethernet RIO Network (RSTP)
Communication Network Type	IPv4 (internet protocol)
Communication Port Protocol	EtherNet/IP
Communication Service	Ethernet/IP adapter RSTP (Ring topology support) Ethernet RIO network Quality of Service (QoS) CIP Explicit messaging (server) Modbus TCP server for module diagnostics DHCP client TFTP client FTP client FDR client SNTP client SNMP agent
Cybersecurity	Enable/disable communication ports Syslog protocol support
Connector Type	3 RJ45
Exchange Mode	Half duplex, full duplex, autonegotiation, auto MDIX
Transmission Rate	10/100 Mbit/s
Port Ethernet	10/100BASE-TX
Function Available	CCOTF (configuration change on the fly) Input data is collected and published to the remote I/O head adaptor Output modules are updated with the data received from remote I/O head adaptor Diagnostics for remote I/O devices (Device DDT) Port mirroring System time stamping Non-interfering type 1 I/O extension rack
Data Recording	10 ms time stamps
Topology	Ring

Disclaimer: This documentation is not intended as a substitute for and is not to be used for determining suitability or reliability of these products for specific user applications

Local Signalling	1 LED (green) for module active (RUN) 1 LED (red) for module error (ERR) 1 LED (green/red) for module status (Mod Status) 1 LED (green/red) for network communication status (Net Status) 1 LED (green) for Ethernet link diagnostics (STS)
Current Consumption	1200 mA
Input Voltage	3.3 V DC
Product Compatibility	0…1024 discrete channel 0…256 analog channel counter module time-stamping module SSI encoder interface module motion control module frequency input module AS-Interface module serial link module fiber converter modules
Module Format	Standard
Net Weight	0.225 kg
Maximum Altitude Transport	3000 m
Relative Humidity	95 % without condensation
Fixing Mode	By screws
Mounting Mode	Rack-mounted
Width	32 mm
Height	100 mm
Depth	87.5 mm

Environment

Protective Treatment	Conformal coating
Directives	2014/35/EU - low voltage directive 2014/30/EU - electromagnetic compatibility 2014/34/EU - ATEX directive
Product Certifications	CE UL CSA RCM EAC Merchant Navy ATEX zone 2/22 IECEx zone 2/22 Hazardous location class 1, division 2
Standards	EN/IEC 61131-2 EN/IEC 61010-2-201 UL 61010-2-201 CSA C22.2 No 61010-2-201 IACS E10 EN/IEC 61000-6-5, interface type 1 and type 2 EN/IEC 61850-3, location G EN/IEC 60079-0 UL 121201 CSA C22.2 No 213
Environmental Characteristic	Gas resistant class Gx conforming to ISA S71.04 Gas resistant class 3C4 conforming to IEC 60721-3-3 Dust resistant class 3S4 conforming to IEC 60721-3-3 Sand resistant class 3S4 conforming to IEC 60721-3-3 Salt resistant level 2 conforming to IEC 68252 Mold growth resistant class 3B2 conforming to IEC 60721-3-3 Fungal spore resistant class 3B2 conforming to IEC 60721-3-3
Ip Degree Of Protection	IP20

Ambient Air Temperature For Operation	-25…60 °C
Ambient Air Temperature For Storage	-40…85 °C
Operating Altitude	<= 2000 m

Packing Units

Unit Type Of Package 1	PCE
Number Of Units In Package 1	1
Package 1 Height	5.500 cm
Package 1 Width	11.000 cm
Package 1 Length	11.600 cm
Package 1 Weight	270.000 g
Unit Type Of Package 2	S02
Number Of Units In Package 2	15
Package 2 Height	15.000 cm
Package 2 Width	30.000 cm
Package 2 Length	40.000 cm
Package 2 Weight	4.392 kg

Contractual warranty

Warranty	18 months

Sustainability

Green Premium™ label is Schneider Electric's commitment to delivering products with best-in-class environmental performance. Green Premium promises compliance with the latest regulations, transparency on environmental impacts, as well as circular and low-CO_2 products.

Guide to assessing product sustainability is a white paper that clarifies global eco-label standards and how to interpret environmental declarations.

Learn more about Green Premium >

Guide to assess a product's sustainability >

Transparency RoHS/REACh

Well-being performance

Mercury Free

Rohs Exemption Information	Yes

Certifications & Standards

Reach Regulation	REACh Declaration
Eu Rohs Directive	Pro-active compliance (Product out of EU RoHS legal scope)
China Rohs Regulation	China RoHS declaration
Environmental Disclosure	Product Environmental Profile
Weee	The product must be disposed on European Union markets following specific waste collection and never end up in rubbish bins
Circularity Profile	End of Life Information

Presentation

Presentation

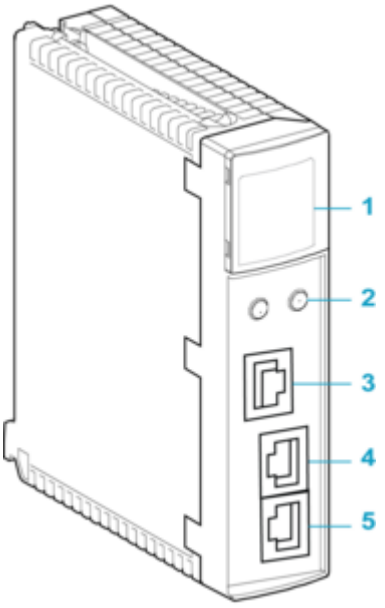

1 : LED display
2 : rotary switches
3 : SERVICE port (ETH 1)
4 : DEVICE NETWORK port (ETH 2)
5 : DEVICE NETWORK port (ETH 3)

Dimensions Drawings

Modules Mounted on Racks

Dimensions

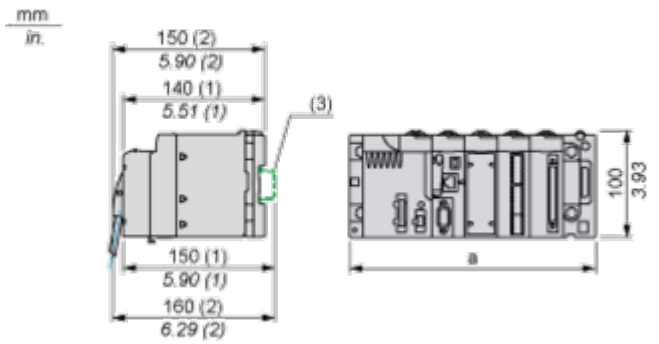

(1) With removable terminal block (cage, screw or spring).
(2) With FCN connector.
(3) On AM1 ED rail: 35 mm wide, 15 mm deep. Only possible with BMXXBP0400/0400H/0600/0600H/0800/0800H rack.

Rack references	a in mm	a in in.
BMXXBP0400 and BMXXBP0400H	242.4	09.54
BMXXBP0600 and BMXXBP0600H	307.6	12.11
BMXXBP0800 and BMXXBP0800H	372.8	14.68
BMXXBP1200 and BMXXBP1200H	503.2	19.81