Product datasheet

Specifications

Cam switch, Harmony K, Ø 22mm, plastic, 2 poles, 2 positions, 45°, 20A, 45x45mm,metallic legend, marked 0/1, 35mm black handle

K2B002ACH

Main

Range Of Product	Harmony K
Product Or Component Type	Complete cam switch
Component Name	K2
[Ith] Conventional Free Air Thermal Current	20 A
Mounting Location	Front
Fixing Mode	Ø 22 mm hole
Cam Switch Head Type	With front plate 45 x 45 mm
Type Of Operator	Black handle, length = 35 mm
Rotary Handle Padlocking	Without
Presentation Of Legend	With metallic legend, 0 - 1 black marking
Cam Switch Function	Switch
Return	Without
Off Position	With Off position
Poles Description	2P
Switching Positions	Right: 0° - 45°
Ip Degree Of Protection	IP65 conforming to IEC 529

Complementary

Switching Angle	45 °
[Ui] Rated Insulation Voltage	690 V (pollution degree 3) conforming to IEC 60947-1
[Ithe] Conventional Enclosed Thermal Current	16 A
Electrical Durability	200000 cycles AC-23 200000 cycles AC-3 600000 cycles AC-15 600000 cycles AC-21
Maximum Operating Rate	2.5 cyc/mn AC-21 2.5 cyc/mn AC-23 2.5 cyc/mn AC-3 8.333 cyc/mn AC-15
Short-Circuit Current	10000 A
Short-Circuit Protection	20 A cartridge fuse, type gG
[Uimp] Rated Impulse Withstand Voltage	4 kV in isolating function 6 kV conforming to IEC 947-1
Contact Operation	Slow-break

Disclaimer: This documentation is not intended as a substitute for and is not to be used for determining suitability or reliability of these products for specific user applications

Positive Opening	With
Electrical Connection	Captive screw clamp terminals flexible, clamping capacity: 2 x 1.5 mm² Captive screw clamp terminals solid, clamping capacity: 1 x 2.5 mm²
Mechanical Durability	1000000 cycles
Cad Overall Width	45 mm
Cad Overall Height	50 mm
Cad Overall Depth	49 mm
Net Weight	0.133 kg

Environment

Standards	EN/IEC 60947-3 for power circuit EN/IEC 60947-5-1 for control circuit CENELEC EN 50013 GB/T 14048.5 for control circuit GB/T 14048.3 for power circuit
Product Certifications	CSA 240 V 3 hp 3 phases 2 -pole(s) UL 240 V 0.33 hp 1 phase 2 -pole(s) CSA 240 V 1 hp 1 phase UL 240 V 1 hp 3 phases CCC
Protective Treatment	TC
Ambient Air Temperature For Operation	-25…55 °C
Ambient Air Temperature For Storage	-40…70 °C
Shock Resistance	30 gn conforming to IEC 68-2-27
Vibration Resistance	5 gn conforming to IEC 68-2-6 (f = 10…150 Hz)
Overvoltage Category	Class II conforming to IEC 536 Class II conforming to NF C 20-030

Packing Units

Unit Type Of Package 1	PCE
Number Of Units In Package 1	1
Package 1 Height	6.700 cm
Package 1 Width	6.800 cm
Package 1 Length	11.600 cm
Package 1 Weight	146.000 g
Unit Type Of Package 2	S01
Number Of Units In Package 2	10
Package 2 Height	15.000 cm
Package 2 Width	15.000 cm
Package 2 Length	40.000 cm
Package 2 Weight	1.662 kg

Contractual warranty

Warranty	18 months

Sustainability

Green Premium™ label is Schneider Electric's commitment to delivering products with best-in-class environmental performance. Green Premium promises compliance with the latest regulations, transparency on environmental impacts, as well as circular and low-CO_2 products.

Guide to assessing product sustainability is a white paper that clarifies global eco-label standards and how to interpret environmental declarations.

Learn more about Green Premium >

Guide to assess a product's sustainability >

Transparency RoHS/REACh

Well-being performance

Reach Free Of Svhc	
Toxic Heavy Metal Free	
Mercury Free	
Rohs Exemption Information	Yes

Certifications & Standards

Reach Regulation	REACh Declaration
Eu Rohs Directive	Pro-active compliance (Product out of EU RoHS legal scope) EU RoHS Declaration
China Rohs Regulation	China RoHS declaration
Environmental Disclosure	Product Environmental Profile
Weee	The product must be disposed on European Union markets following specific waste collection and never end up in rubbish bins
Circularity Profile	No need of specific recycling operations

Dimensions Drawings

Operating Head and Body with Plastic Base

Front Mounting by Ø 22 mm/0.87 in. Hole

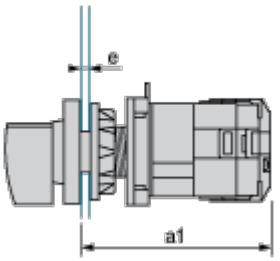

a1 70.5 mm/2.78 in.

e support panel thickness 1 mm to 6 mm./0.039 in. to 0.24 in.

Technical Description

Link Positions (Factory Mounted)

Diagram for 1 to 6-pole Switches

Select the number of poles according to the product characteristics.

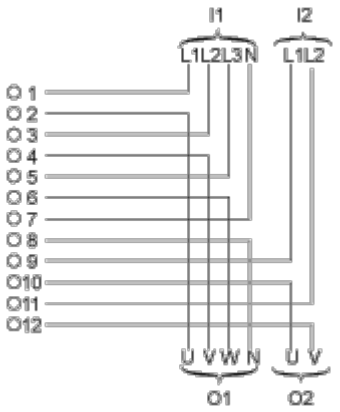

I1 Input 1

I2 Input 2

O1 Output 1

O2 Output 2

Marking

Angular Position of Switch

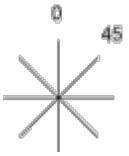

Switching Program

Diagram for 1 to 6-pole Switches

Select the number of poles according to the product characteristics.

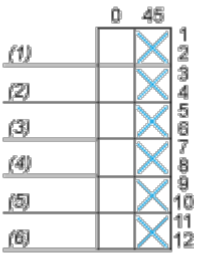

(1) 1-pole

(2) 2-pole

(3) 3-pole

(4) 4-pole

(5) 5-pole

(6) 6-pole

Convention Used for Switching Program Representation

Contact closed

Contact closed in 2 positions and maintained between the 2 positions

Sealed assembly for auto-maintain control

Overlapping contacts

Spring return position: for a switching angle of 90°, spring return is over 30° after the last position (for a maximum of 3 simultaneous contacts).
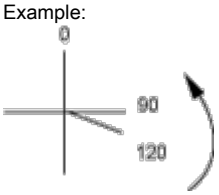
Example: