Product datasheet

Specifications

Green Premium™

EP MVS 1600A 65kA 3P EDO 240VAC W/O PROT drawout elec switch disconnector

MVS16H3NW0D

Main

Range Of Product	EasyPact MVS
Range	EasyPact
Product Name	MVS16HA
Device Short Name	MVS16HA
Product Or Component Type	Switch disconnector
Device Application	Distribution
Poles Description	3P
Network Type	AC
Suitability For Isolation	Yes conforming to IEC 60947-2
Utilisation Category	AC-23A

Complementary

Network Frequency	50/60 Hz
Control Type	Electrically operated
Mounting Mode	Drawout
Mounting Support	Rail Base plate
Connection Position	Horizontal Vertical
Location Of Connection	Rear
[Ie] Rated Operational Current	AC-23A: 1600 A AC 50/60 Hz 690 V
Rated Duty	Continuous
[Ui] Rated Insulation Voltage	1000 V AC 50/60 Hz conforming to IEC 60947-3
[Uimp] Rated Impulse Withstand Voltage	12 kV conforming to IEC 60947-3
[Icw] Rated Short-Time Withstand Current	65 kA during 1 s conforming to IEC 60947-3 at -5…70 °C 36 kA during 3 s conforming to IEC 60947-3 at -5…70 °C
[Icm] Rated Short-Circuit Making Capacity	143 kA AC at 50/60 Hz
[Ue] Rated Operational Voltage	690 V AC 50/60 Hz conforming to IEC 60947-3
Contact Position Indicator	Yes
Mechanical Durability	20000 cycles with maintenance conforming to IEC 60947-3 10000 cycles without maintenance conforming to IEC 60947-3

Disclaimer: This documentation is not intended as a substitute for and is not to be used for determining suitability or reliability of these products for specific user applications

Electrical Durability	AC-23A: 6000000 cycles 440 V AC 50/60 Hz without maintenance conforming to IEC 60947-3 AC-23A: 4000000 cycles 690 V AC 50/60 Hz without maintenance conforming to IEC 60947-3
Connection Pitch	115 mm without spreader
Height	439 mm
Width	441 mm
Depth	395 mm
Net Weight	70 kg

Environment

Standards	IEC 60947-3
Product Certifications	IEC CCC CCS GOST
Ip Degree Of Protection	IP40
Pollution Degree	4 conforming to IEC 60664-1
Ambient Air Temperature For Operation	-5…70 °C
Ambient Air Temperature For Storage	-40…85 °C without control unit

Packing Units

Unit Type Of Package 1	PCE
Number Of Units In Package 1	1
Package 1 Height	42.0 cm
Package 1 Width	35.0 cm
Package 1 Length	50.0 cm
Package 1 Weight	38.0 kg

Contractual warranty

Warranty	18 months

Sustainability

Green Premium™ label is Schneider Electric's commitment to delivering products with best-in-class environmental performance. Green Premium promises compliance with the latest regulations, transparency on environmental impacts, as well as circular and low-CO_2 products.

Guide to assessing product sustainability is a white paper that clarifies global eco-label standards and how to interpret environmental declarations.

Learn more about Green Premium >

Guide to assess a product's sustainability >

Transparency RoHS/REACh

Well-being performance

Mercury Free	
Rohs Exemption Information	Yes
Pvc Free	

Certifications & Standards

Reach Regulation	REACh Declaration
Eu Rohs Directive	Compliant with Exemptions
China Rohs Regulation	China RoHS declaration Product out of China RoHS scope. Substance declaration for your information
Environmental Disclosure	Product Environmental Profile
Circularity Profile	End of Life Information

Dimensions Drawings

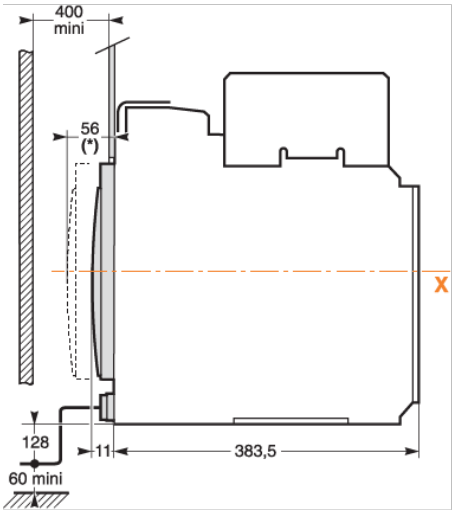

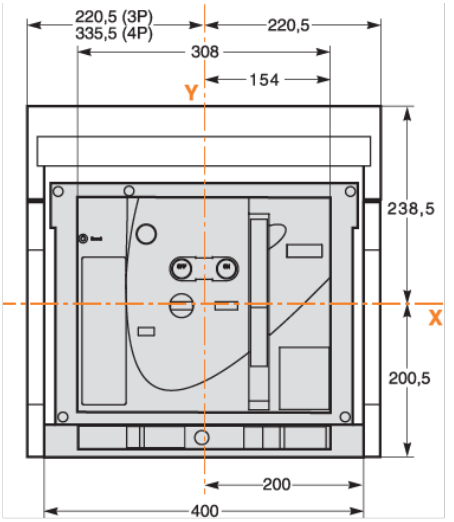

Assembly

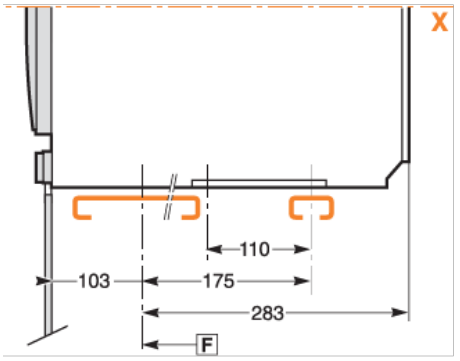
X
110
103
175
283
F

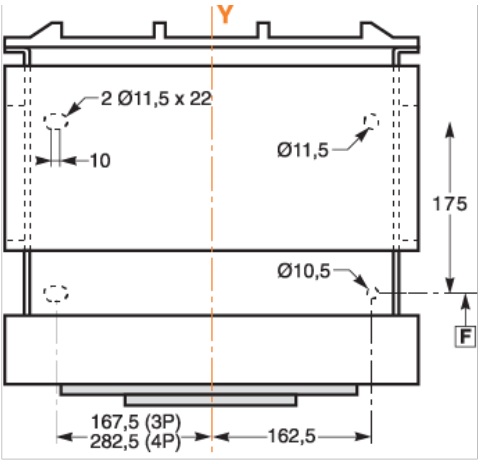
Y
2 Ø11,5 x 22
10
Ø11,5
175
Ø10,5
F
167,5 (3P)
282,5 (4P)
162,5