# Product datasheet

Specifications

Green Premium™

## Controller M200 16I/O transistor Source

TM200C16T

## Main

| | |
|---|---|
| **Range Of Product** | Easy Modicon M200 |
| **Product Or Component Type** | Logic controller |
| **[Us] Rated Supply Voltage** | 24 V DC |
| **Discrete I/O Number** | 16 |
| **Discrete Input Number** | I8: 1 regular input<br>I2...I5: 4 fast input<br>I0, I1, I6, I7: 4 high speed input |
| **Discrete Output Number** | Q2...Q6: 5 transistor output<br>Q0...Q1: 2 fast output (PLS/PWM/PTO mode) |
| **Discrete Input Voltage** | 24 V |
| **Discrete Input Voltage Type** | DC |
| **Discrete Input Current** | 7 mA for input |
| **Discrete Input Logic** | Sink or source (positive/negative) type 1 conforming to IEC 61131-2 |
| **Discrete Output Voltage** | 24 V DC |
| **Discrete Output Current** | 0.5 A |
| **Discrete Output Type** | Transistor |
| **Discrete Output Logic** | Positive logic (source) |
| **Power Consumption In W** | 15.5 W at 24 V DC (with max I/O) |

## Complementary

| | |
|---|---|
| **Maximum Number Of I/O Expansion Module** | 4 with 135 discrete output(s) for transistor output<br>4 with 64 discrete output(s) for relay output |
| **Supply Voltage Limits** | 20.4…28.8 V |
| **Inrush Current** | 35 A |
| **Voltage State 1 Guaranteed** | >= 15 V for input |
| **Voltage State 0 Guaranteed** | <= 5 V for input |
| **Input Impedance** | 3.3 kOhm for discrete input |
| **Response Time** | 1 ms turn-on, Q0...Q6 terminal(s) for output<br>1 ms turn-off, Q0...Q7 terminal(s) for output<br>5 µs turn-off, I0, I1, I6, I7 terminal(s) for high speed input<br>5 µs turn-on, I0, I1, I6, I7 terminal(s) for high speed input<br>100 µs turn-off, I2...I5 terminal(s) for fast input<br>35 µs turn-on, I2...I5 terminal(s) for fast input<br>100 µs turn-off, I8 terminal(s) for regular input<br>35 µs turn-on, I8 terminal(s) for regular input |
| **Configurable Filtering Time** | 0 ms for input<br>3 ms for input<br>12 ms for input |

Disclaimer: This documentation is not intended as a substitute for and is not to be used for determining suitability or reliability of these products for specific user applications

| | |
|---|---|
| **Maximum Current Per Output Common** | 3.5 A at COM 0 |
| **Output Frequency** | 100 kHz for fast output (PWM/PLS mode) at Q0...Q1 |
| **Maximum Leakage Current** | 0.1 mA for transistor output |
| **Maximum Voltage Drop** | <1 V |
| **Maximum Tungsten Load** | <12 W for output and fast output |
| **Protection Type** | Overload and short-circuit protection at 2 A |
| **Reset Time** | 1 s automatic reset |
| **Memory Capacity** | 512 byte internal flash for backup of programs |
| **Data Storage Equipment** | 32 GB micro SD card (optional) |
| **Battery Type** | BR2032 Li-CFx (Lithium-Carbon Monofluoride), battery life: 5 year(s) |
| **Backup Time** | 3 years at 25 °C (by interruption of power supply) |
| **Execution Time For 1 Kinstruction** | 0.3 ms for event and periodic task |
| **Execution Time Per Instruction** | 0.2 µs Boolean |
| **Exct Time For Event Task** | 60 µs response time |
| **Clock Drift** | <= 90 s/month at 25 °C |
| **Regulation Loop** | Adjustable PID regulator up to 14 simultaneous loops |
| **Positioning Functions** | PWM/PLS 2 channel(s) at 100 kHz |
| **Control Signal Type** | Quadrature (x1, x2, x4) at 100 kHz for fast input (HSC mode)<br>Pulse/direction at 100 kHz for fast input (HSC mode)<br>Single phase at 100 kHz for fast input (HSC mode)<br>CW/CCW at 100 kHz for fast input (HSC mode) |
| **Counting Input Number** | 4 fast input (HSC mode) at 100 kHz 32 bits |
| **Integrated Connection Type** | USB port with mini B USB 2.0 connector<br>Non isolated serial link serial 1 with terminal block connector and RS485 interface<br>Non isolated serial link serial 2 with terminal block connector and RS232/RS485 interface<br>Isolated serial link serial 2 with terminal block connector and RS485 interface |
| **Transmission Rate** | 1.2...115.2 kbit/s (115.2 kbit/s by default) for bus length of 15 m for RS485<br>1.2...115.2 kbit/s (115.2 kbit/s by default) for bus length of 3 m for RS232<br>12 Mbit/s for USB |
| **Communication Port Protocol** | USB port: USB - SoMachine-Network<br>Non isolated serial link: Modbus master/slave - RTU/ASCII or SoMachine-Network |
| **Local Signalling** | 1 LED (green) for PWR<br>1 LED (green) for RUN<br>1 LED (red) for module error (ERR)<br>1 LED (green) for SD card access (SD)<br>1 LED (red) for BAT<br>1 LED (green) for SL1<br>1 LED per channel (green) for I/O state |
| **Electrical Connection** | Mini B USB 2.0 connectorfor a programming terminal<br>removable screw terminal blockfor inputs<br>removable screw terminal blockfor outputs<br>removable screw terminal block, 3 terminal(s) for connecting the 24 V DC power supply<br>removable screw terminal block, 4 terminal(s) for connecting the serial link1 |
| **Maximum Cable Distance Between Devices** | Unshielded cable: <50 m for input<br>Shielded cable: <10 m for fast input<br>Shielded cable: <10 m for high speed input<br>Unshielded cable: <150 m for output |

| | |
|---|---|
| **Insulation** | Non-insulated between inputs<br>Between input and internal logic at 500 V AC<br>Between fast input and internal logic at 500 V AC<br>Between input groups at 500 V AC<br>Between output and internal logic at 500 V AC<br>Between output groups at 500 V AC<br>Between supply and internal logic at 500 V DC |
| **Marking** | CE |
| **Mounting Support** | Top hat type TH35-15 rail conforming to IEC 60715<br>Top hat type TH35-7.5 plate or panel with fixing kit conforming to IEC 60715 |
| **Height** | 90 mm |
| **Depth** | 70 mm |
| **Width** | 110 mm |
| **Net Weight** | 0.365 kg |

# Environment

| | |
|---|---|
| **Ip Degree Of Protection** | IP20 with protective cover in place |
| **Standards** | IEC 61131-2<br>IEC 61010-2-201 |
| **Electromagnetic Compatibility** | Electrostatic discharge immunity test - test level: 8 kV (air discharge) conforming to IEC 61000-4-2<br>Electrostatic discharge immunity test - test level: 6 kV (contact discharge) conforming to IEC 61000-4-2<br>Susceptibility to electromagnetic fields - test level: 10 V/m (80 MHz...3 GHz) conforming to IEC 61000-4-3<br>Magnetic field at power frequency - test level: 30 A/m conforming to IEC 61000-4-8<br>Electrical fast transient/burst immunity test - test level: 2 kV (power lines) conforming to IEC 61000-4-4<br>Electrical fast transient/burst immunity test - test level: 2 kV (relay output) conforming to IEC 61000-4-4<br>Electrical fast transient/burst immunity test - test level: 1 kV (I/O) conforming to IEC 61000-4-4<br>Electrical fast transient/burst immunity test - test level: 1 kV (serial link) conforming to IEC 61000-4-4<br>1.2/50 µs shock waves immunity test - test level: 1 kV (power lines (DC)) conforming to IEC 61000-4-5<br>1.2/50 µs shock waves immunity test - test level: 2 kV (power lines (AC)) conforming to IEC 61000-4-5<br>1.2/50 µs shock waves immunity test - test level: 2 kV (relay output) conforming to IEC 61000-4-5<br>1.2/50 µs shock waves immunity test - test level: 1 kV (I/O) conforming to IEC 61000-4-5<br>1.2/50 µs shock waves immunity test - test level: 1 kV (shielded cable) conforming to IEC 61000-4-5<br>1.2/50 µs shock waves immunity test - test level: 0.5 kV (power lines (DC)) conforming to IEC 61000-4-5<br>1.2/50 µs shock waves immunity test - test level: 1 kV (power lines (AC)) conforming to IEC 61000-4-5<br>Conducted RF disturbances - test level: 10 V (0.15...80 MHz) conforming to IEC 61000-4-6<br>Conducted emission - test level: 79 dBµV/m QP/66 dBµV/m AV (power lines (AC)) conforming to IEC 55011<br>Conducted emission - test level: 73 dBµV/m QP/60 dBµV/m AV (power lines (AC)) conforming to IEC 55011<br>Radiated emission - test level: 40 dBµV/m QP class A (10 m) conforming to IEC 55011<br>Radiated emission - test level: 47 dBµV/m QP class A (10 m) conforming to IEC 55011 |
| **Shock Resistance** | 15 gn for 11 ms<br>30 gn for 6 ms |
| **Immunity To Microbreaks** | 2 ms |
| **Vibration Resistance** | 3.5 mm at 5…8.4 Hz on symmetrical rail<br>1 gn at 8.4…150 Hz on symmetrical rail<br>3.5 mm at 5…8.7 Hz on panel mounting<br>2 gn at 8.7…150 Hz on panel mounting |

| | |
|---|---|
| **Relative Humidity** | 10…95 %, without condensation (in operation)<br>10…95 %, without condensation (in storage) |
| **Ambient Air Temperature For Operation** | 0…55 °C (horizontal installation) |
| **Ambient Air Temperature For Storage** | -25…70 °C |
| **Pollution Degree** | <= 2 |
| **Operating Altitude** | 0...2000 m |
| **Storage Altitude** | 0…3000 m |

## Packing Units

| | |
|---|---|
| **Unit Type Of Package 1** | PCE |
| **Number Of Units In Package 1** | 1 |
| **Package 1 Height** | 13.6 cm |
| **Package 1 Width** | 9 cm |
| **Package 1 Length** | 11.8 cm |
| **Package 1 Weight** | 517 g |
| **Unit Type Of Package 2** | S03 |
| **Number Of Units In Package 2** | 18 |
| **Package 2 Height** | 30 cm |
| **Package 2 Width** | 30 cm |
| **Package 2 Length** | 40 cm |
| **Package 2 Weight** | 9906 g |
| **Unit Type Of Package 3** | P12 |
| **Number Of Units In Package 3** | 432 |
| **Package 3 Height** | 80 cm |
| **Package 3 Width** | 120 cm |
| **Package 3 Length** | 105 cm |
| **Package 3 Weight** | 246744 g |

## Sustainability

**Green Premium™ label** is Schneider Electric's commitment to delivering products with best-in-class environmental performance. Green Premium promises compliance with the latest regulations, transparency on environmental impacts, as well as circular and low-$CO_2$ products.

**Guide to assessing product sustainability** is a white paper that clarifies global eco-label standards and how to interpret environmental declarations.

Learn more about Green Premium >

Guide to assess a product's sustainability >

Transparency RoHS/REACh

## Well-being performance

Mercury Free

| | |
|---|---|
| Rohs Exemption Information | Yes |

## Certifications & Standards

| | |
|---|---|
| **Reach Regulation** | REACh Declaration |
| **Eu Rohs Directive** | Pro-active compliance (Product out of EU RoHS legal scope) |
| **China Rohs Regulation** | China RoHS declaration |
| **Environmental Disclosure** | Product Environmental Profile |
| **Weee** | The product must be disposed on European Union markets following specific waste collection and never end up in rubbish bins |
| **Circularity Profile** | End of Life Information |

Dimensions Drawings

## Dimensions Drawings

### Dimensions

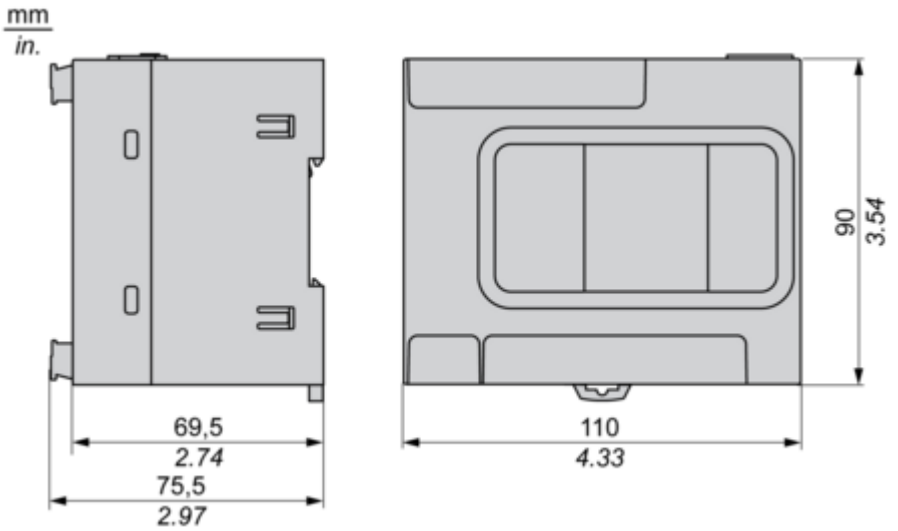

Mounting and Clearance

## Mounting and Clearance

### Mounting on a Rail

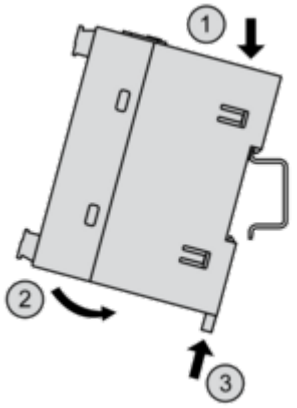


### Direct Mounting on a Panel Surface

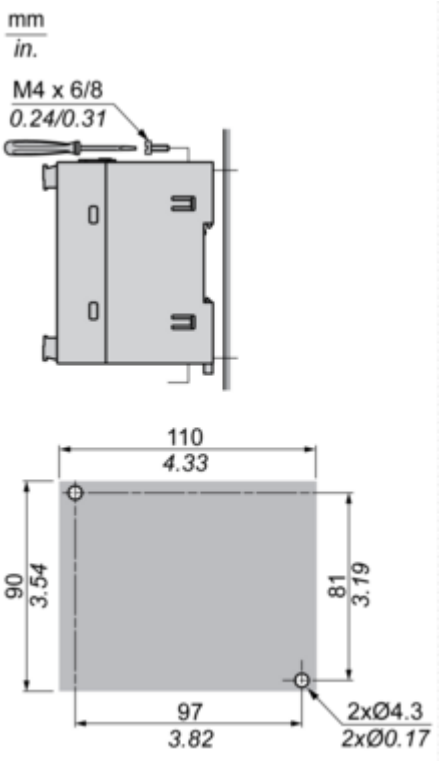


### Mounting Position

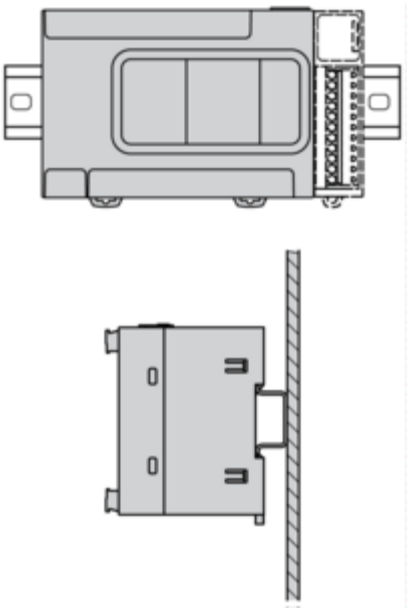

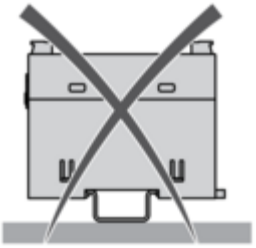

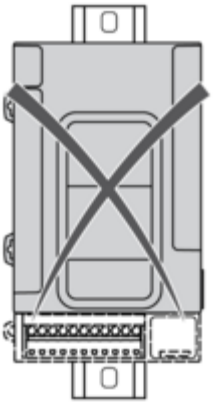

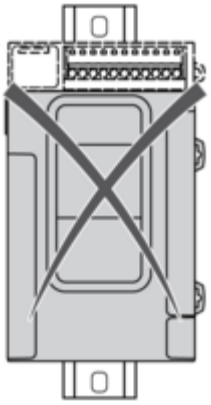

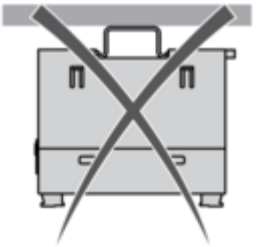

## Clearance

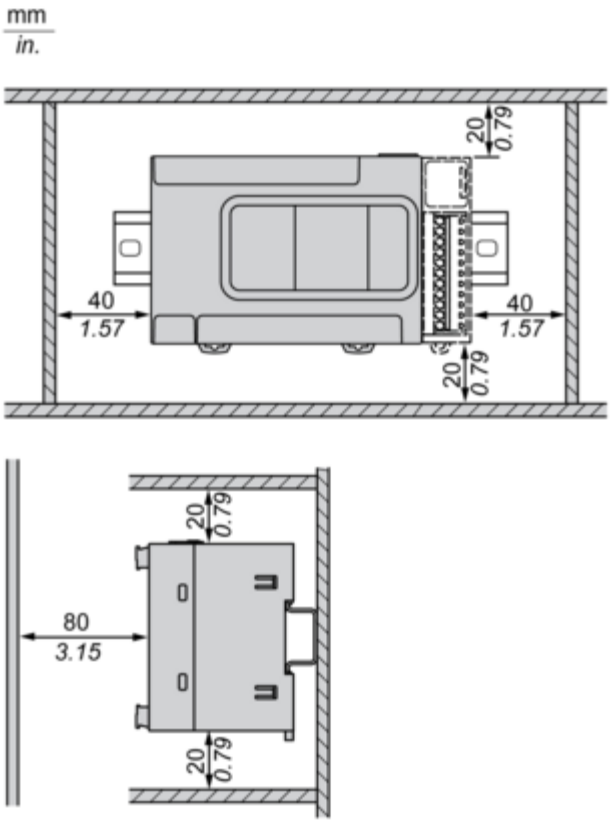


**TMCR2•••Installation**

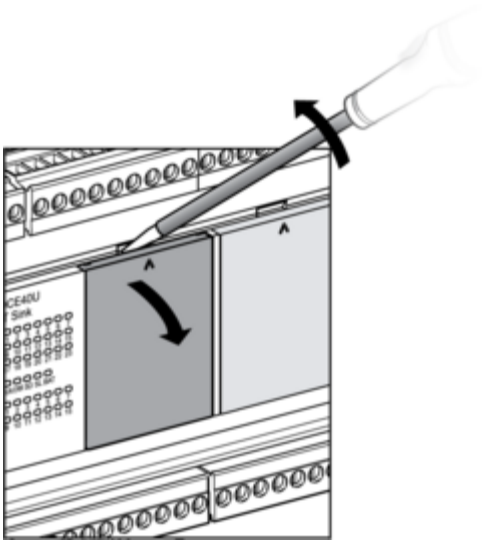

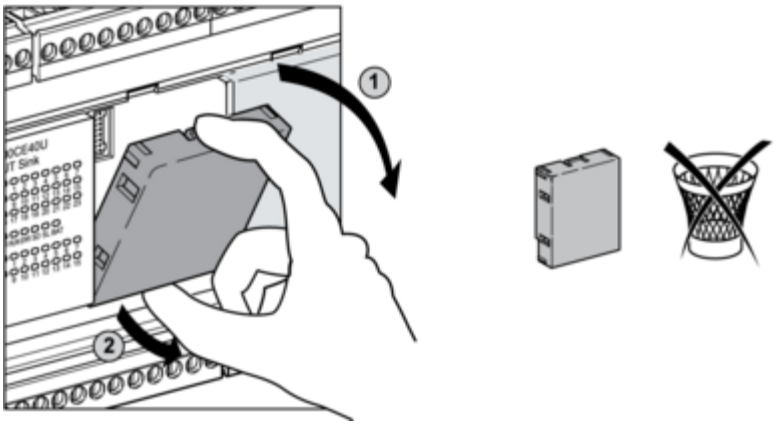


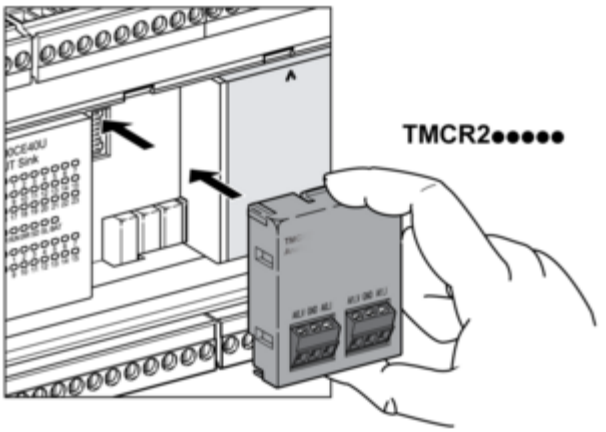


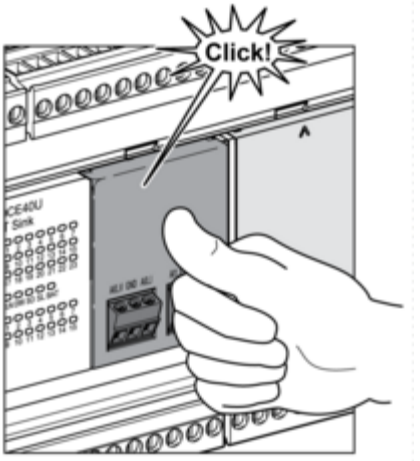


**TMCR2••• De-Installation**

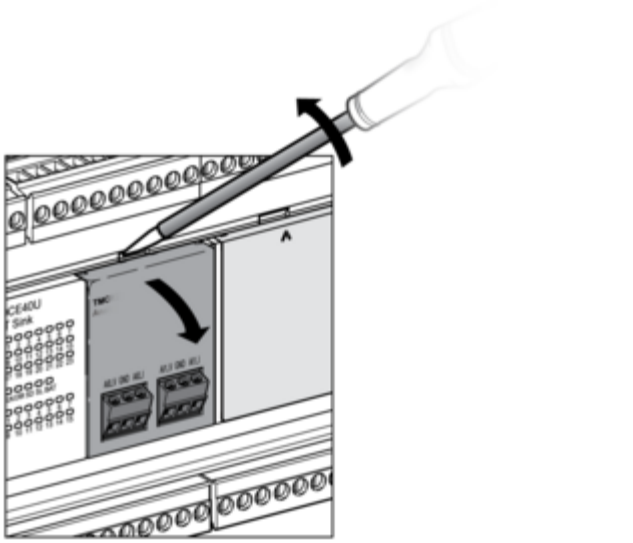

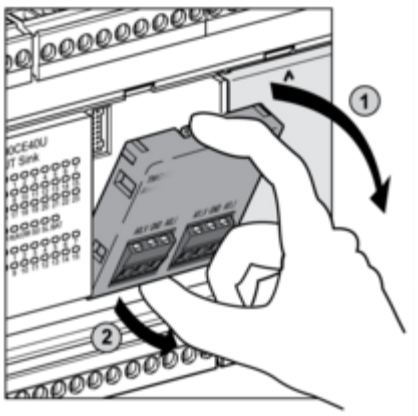
1
2

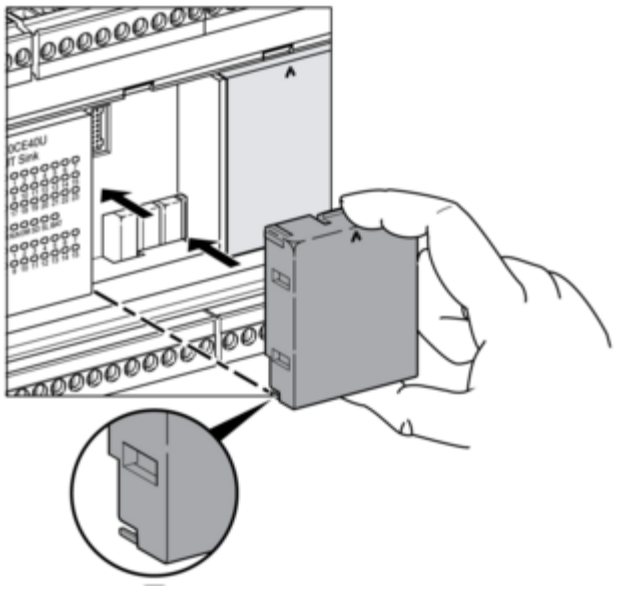

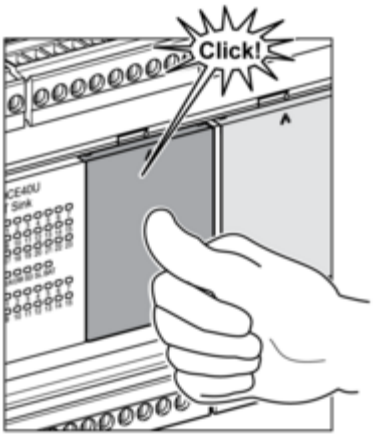
Click!

## Connections and Schema

### Wiring Diagram / Connections Schema

#### DC Power Supply

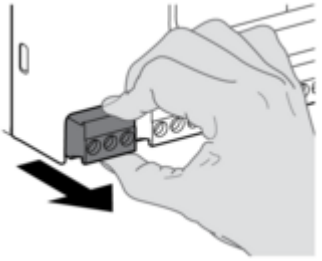

#### Digital Inputs (Sink or Source)

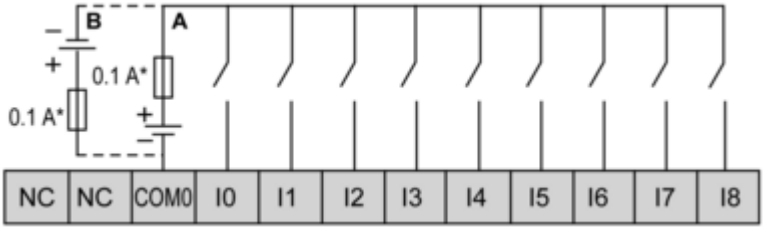


** I0...I8

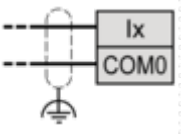


**(*)** Type T fuse
**(**)** Fast inputs
**A** Sink wiring (positive logic)
**B** Source wiring (negative logic)

#### Regular and Fast Transistor Output

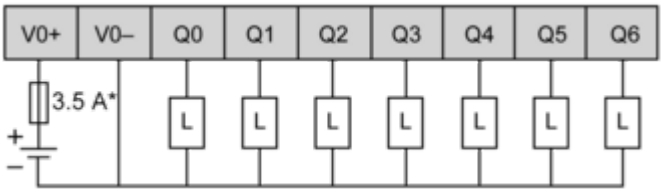


** Q0...Q6

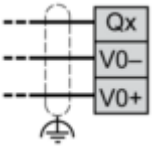


**(*)** Type T fuse
**(**)** Fast outputs

#### USB Mini-B Connection

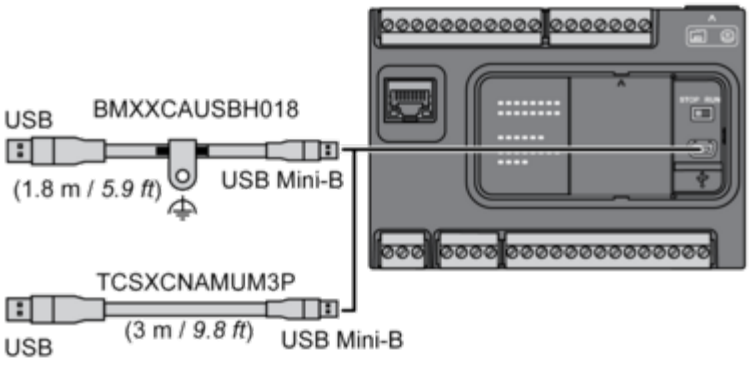

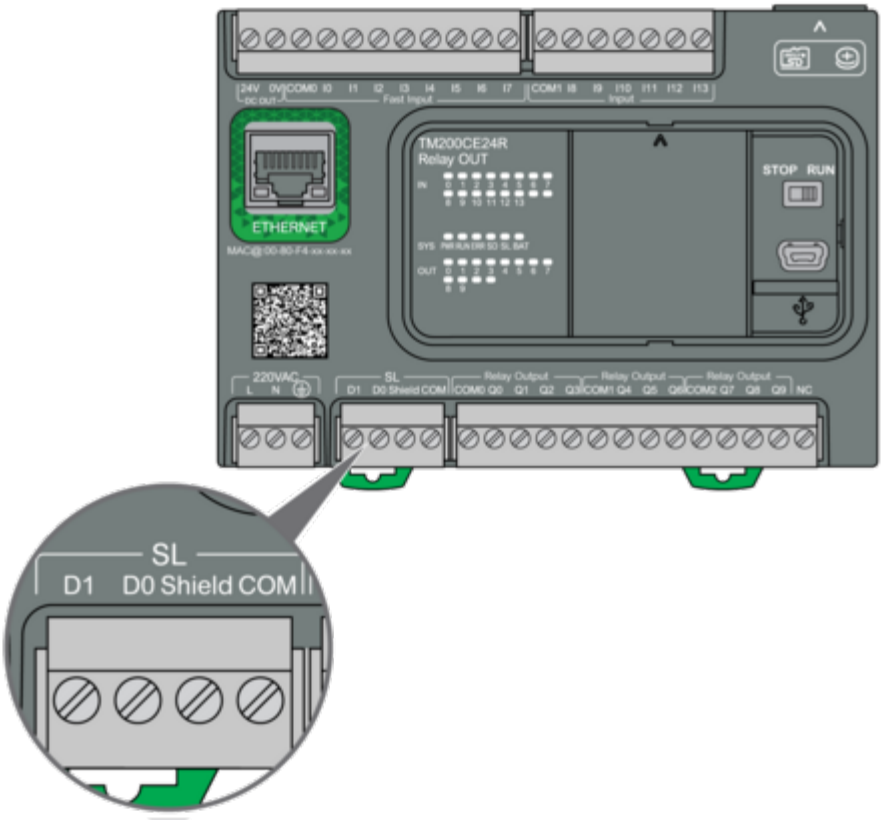
**SL1 Connection**