Product datasheet

Specifications

Green Premium™

controller M200 24 IO transistor Source

TM200C24T

Main

Range Of Product	Easy Modicon M200
Product Or Component Type	Logic controller
[Us] Rated Supply Voltage	24 V DC
Discrete I/O Number	24
Discrete Input Number	I2...I5: 4 fast input I0, I1, I6, I7: 4 high speed input I8...I13: 6 regular input
Discrete Output Number	Q0...Q1: 2 fast output (PLS/PWM/PTO mode) Q2...Q9: 8 transistor output
Discrete Input Voltage	24 V
Discrete Input Voltage Type	DC
Discrete Input Current	7 mA for input
Discrete Input Logic	Sink or source (positive/negative) type 1 conforming to IEC 61131-2
Discrete Output Voltage	24 V DC
Discrete Output Current	0.5 A
Discrete Output Type	Transistor
Discrete Output Logic	Positive logic (source)
Power Consumption In W	16 W at 24 V DC (with max I/O)

Complementary

Maximum Number Of I/O Expansion Module	4 with 64 discrete output(s) for relay output 4 with 138 discrete output(s) for transistor output
Supply Voltage Limits	20.4…28.8 V
Inrush Current	35 A
Voltage State 1 Guaranteed	>= 15 V for input
Voltage State 0 Guaranteed	<= 5 V for input
Input Impedance	3.3 kOhm for discrete input
Response Time	1 ms turn-on, Q0...Q9 terminal(s) for output 1 ms turn-off, Q0...Q9 terminal(s) for output 5 µs turn-off, I0, I1, I6, I7 terminal(s) for high speed input 5 µs turn-on, I0, I1, I6, I7 terminal(s) for high speed input 100 µs turn-off, I2...I5 terminal(s) for fast input 35 µs turn-on, I2...I5 terminal(s) for fast input 100 µs turn-off, I8...I13 terminal(s) for regular input 35 µs turn-on, I8...I13 terminal(s) for regular input
Configurable Filtering Time	0 ms for input 3 ms for input 12 ms for input

Disclaimer: This documentation is not intended as a substitute for and is not to be used for determining suitability or reliability of these products for specific user applications

Maximum Current Per Output Common	2 A at COM 0 3 A at COM 1
Output Frequency	100 kHz for fast output (PWM/PLS mode) at Q0...Q1
Maximum Leakage Current	0.1 mA for transistor output
Maximum Voltage Drop	<1 V
Maximum Tungsten Load	<12 W for output and fast output
Protection Type	Overload and short-circuit protection at 2 A
Reset Time	1 s automatic reset
Memory Capacity	512 byte internal flash for backup of programs
Data Storage Equipment	32 GB micro SD card (optional)
Battery Type	BR2032 Li-CFx (Lithium-Carbon Monofluoride), battery life: 5 year(s)
Backup Time	3 years at 25 °C (by interruption of power supply)
Execution Time For 1 Kinstruction	0.3 ms for event and periodic task
Execution Time Per Instruction	0.2 µs Boolean
Exct Time For Event Task	60 µs response time
Clock Drift	<= 90 s/month at 25 °C
Regulation Loop	Adjustable PID regulator up to 14 simultaneous loops
Positioning Functions	PWM/PLS 2 channel(s) at 100 kHz
Control Signal Type	Quadrature (x1, x2, x4) at 100 kHz for fast input (HSC mode) Pulse/direction at 100 kHz for fast input (HSC mode) Single phase at 100 kHz for fast input (HSC mode) CW/CCW at 100 kHz for fast input (HSC mode)
Counting Input Number	4 fast input (HSC mode) at 100 kHz 32 bits
Integrated Connection Type	USB port with mini B USB 2.0 connector Non isolated serial link serial 1 with terminal block connector and RS485 interface Non isolated serial link serial 2 with terminal block connector and RS232/RS485 interface Isolated serial link serial 2 with terminal block connector and RS485 interface
Transmission Rate	1.2...115.2 kbit/s (115.2 kbit/s by default) for bus length of 15 m for RS485 1.2...115.2 kbit/s (115.2 kbit/s by default) for bus length of 3 m for RS232 12 Mbit/s for USB
Communication Port Protocol	USB port: USB - SoMachine-Network Non isolated serial link: Modbus master/slave - RTU/ASCII or SoMachine-Network
Local Signalling	1 LED (green) for PWR 1 LED (green) for RUN 1 LED (red) for module error (ERR) 1 LED (green) for SD card access (SD) 1 LED (red) for BAT 1 LED (green) for SL1 1 LED per channel (green) for I/O state
Electrical Connection	Mini B USB 2.0 connectorfor a programming terminal removable screw terminal blockfor inputs removable screw terminal blockfor outputs removable screw terminal block, 3 terminal(s) for connecting the 24 V DC power supply removable screw terminal block, 4 terminal(s) for connecting the serial link1
Maximum Cable Distance Between Devices	Unshielded cable: <50 m for input Shielded cable: <10 m for fast input Shielded cable: <10 m for high speed input Unshielded cable: <150 m for output

Insulation	Non-insulated between inputs Between input and internal logic at 500 V AC Between fast input and internal logic at 500 V AC Between input groups at 500 V AC Between output and internal logic at 500 V AC Between output groups at 500 V AC Between supply and internal logic at 500 V DC
Marking	CE
Mounting Support	Top hat type TH35-15 rail conforming to IEC 60715 Top hat type TH35-7.5 plate or panel with fixing kit conforming to IEC 60715
Height	90 mm
Depth	70 mm
Width	130 mm
Net Weight	0.416 kg

Environment

Ip Degree Of Protection	IP20 with protective cover in place
Standards	IEC 61010-2-201 IEC 61131-2
Electromagnetic Compatibility	Electrostatic discharge immunity test - test level: 8 kV (air discharge) conforming to IEC 61000-4-2 Electrostatic discharge immunity test - test level: 6 kV (contact discharge) conforming to IEC 61000-4-2 Susceptibility to electromagnetic fields - test level: 10 V/m (80 MHz...3 GHz) conforming to IEC 61000-4-3 Magnetic field at power frequency - test level: 30 A/m conforming to IEC 61000-4-8 Electrical fast transient/burst immunity test - test level: 2 kV (power lines) conforming to IEC 61000-4-4 Electrical fast transient/burst immunity test - test level: 2 kV (relay output) conforming to IEC 61000-4-4 Electrical fast transient/burst immunity test - test level: 1 kV (I/O) conforming to IEC 61000-4-4 Electrical fast transient/burst immunity test - test level: 1 kV (serial link) conforming to IEC 61000-4-4 1.2/50 µs shock waves immunity test - test level: 1 kV (power lines (DC)) conforming to IEC 61000-4-5 1.2/50 µs shock waves immunity test - test level: 2 kV (power lines (AC)) conforming to IEC 61000-4-5 1.2/50 µs shock waves immunity test - test level: 2 kV (relay output) conforming to IEC 61000-4-5 1.2/50 µs shock waves immunity test - test level: 1 kV (I/O) conforming to IEC 61000-4-5 1.2/50 µs shock waves immunity test - test level: 1 kV (shielded cable) conforming to IEC 61000-4-5 1.2/50 µs shock waves immunity test - test level: 0.5 kV (power lines (DC)) conforming to IEC 61000-4-5 1.2/50 µs shock waves immunity test - test level: 1 kV (power lines (AC)) conforming to IEC 61000-4-5 Conducted RF disturbances - test level: 10 V (0.15...80 MHz) conforming to IEC 61000-4-6 Conducted emission - test level: 79 dBµV/m QP/66 dBµV/m AV (power lines (AC)) conforming to IEC 55011 Conducted emission - test level: 73 dBµV/m QP/60 dBµV/m AV (power lines (AC)) conforming to IEC 55011 Radiated emission - test level: 40 dBµV/m QP class A (10 m) conforming to IEC 55011 Radiated emission - test level: 47 dBµV/m QP class A (10 m) conforming to IEC 55011 1.2/50 µs shock waves immunity test - test level: 1 kV (relay output) conforming to IEC 61000-4-5
Shock Resistance	15 gn for 11 ms 30 gn for 6 ms
Immunity To Microbreaks	2 ms

Vibration Resistance	3.5 mm at 5…8.4 Hz on symmetrical rail 1 gn at 8.4…150 Hz on symmetrical rail 3.5 mm at 5…8.7 Hz on panel mounting 2 gn at 8.7…150 Hz on panel mounting
Relative Humidity	10…95 %, without condensation (in operation) 10…95 %, without condensation (in storage)
Ambient Air Temperature For Operation	0…55 °C (horizontal installation)
Ambient Air Temperature For Storage	-25…70 °C
Pollution Degree	<= 2
Operating Altitude	0...2000 m
Storage Altitude	0…3000 m

Packing Units

Unit Type Of Package 1	PCE
Number Of Units In Package 1	1
Package 1 Height	9 cm
Package 1 Width	13.8 cm
Package 1 Length	13.6 cm
Package 1 Weight	616 g
Unit Type Of Package 2	S03
Number Of Units In Package 2	12
Package 2 Height	30 cm
Package 2 Width	30 cm
Package 2 Length	40 cm
Package 2 Weight	7892 g
Unit Type Of Package 3	P12
Number Of Units In Package 3	288
Package 3 Height	95 cm
Package 3 Width	80 cm
Package 3 Length	120 cm
Package 3 Weight	198408 g

Sustainability

Green Premium™ label is Schneider Electric's commitment to delivering products with best-in-class environmental performance. Green Premium promises compliance with the latest regulations, transparency on environmental impacts, as well as circular and low-CO_2 products.

Guide to assessing product sustainability is a white paper that clarifies global eco-label standards and how to interpret environmental declarations.

Learn more about Green Premium >

Guide to assess a product's sustainability >

Transparency RoHS/REACh

Well-being performance

Mercury Free

Rohs Exemption Information	Yes

Certifications & Standards

Reach Regulation	REACh Declaration
Eu Rohs Directive	Pro-active compliance (Product out of EU RoHS legal scope)
China Rohs Regulation	China RoHS declaration
Environmental Disclosure	Product Environmental Profile
Weee	The product must be disposed on European Union markets following specific waste collection and never end up in rubbish bins
Circularity Profile	End of Life Information

Dimensions Drawings

Dimensions Drawings

Dimensions

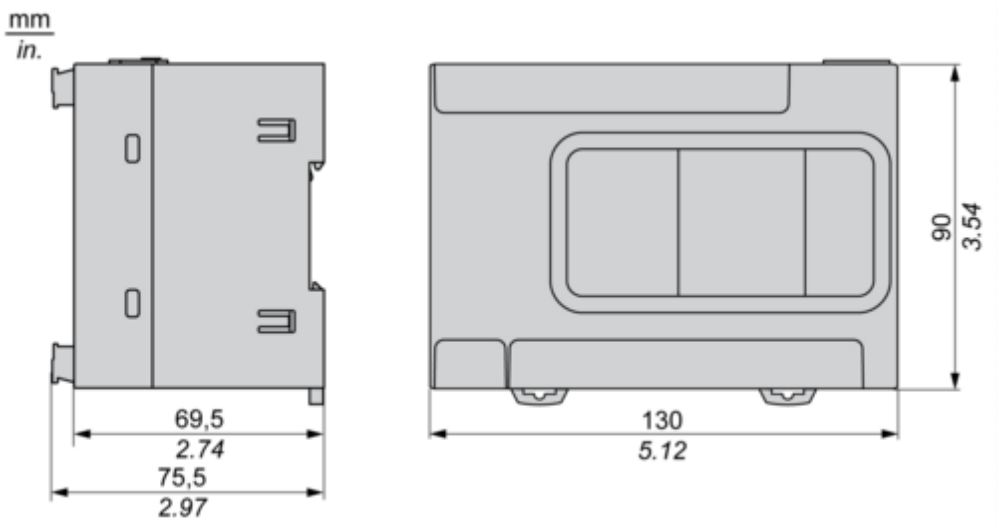

Mounting and Clearance

Mounting and Clearance

Mounting on a Rail

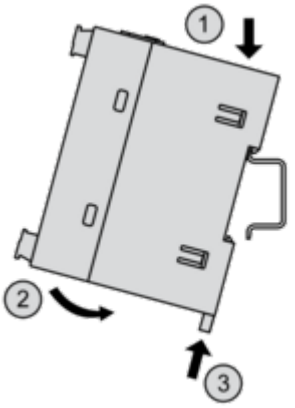

Direct Mounting on a Panel Surface

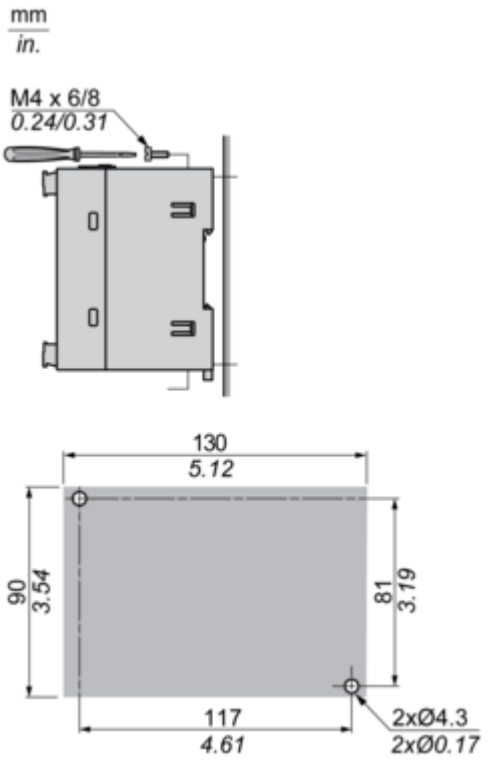

Mounting Position

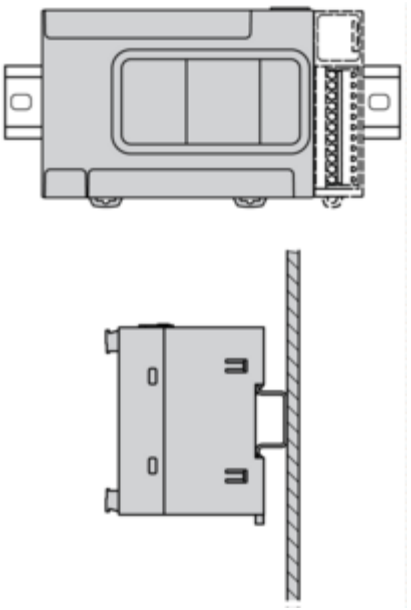

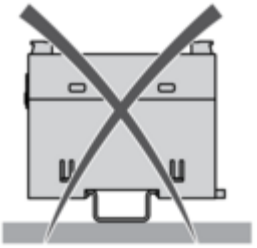

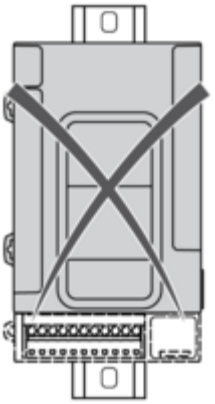

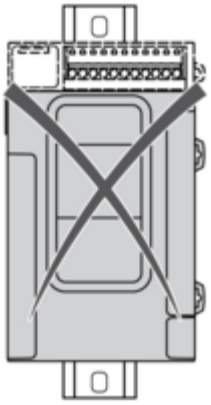

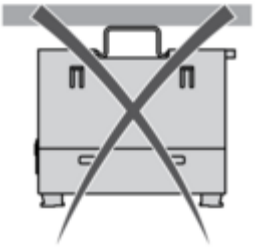

Clearance

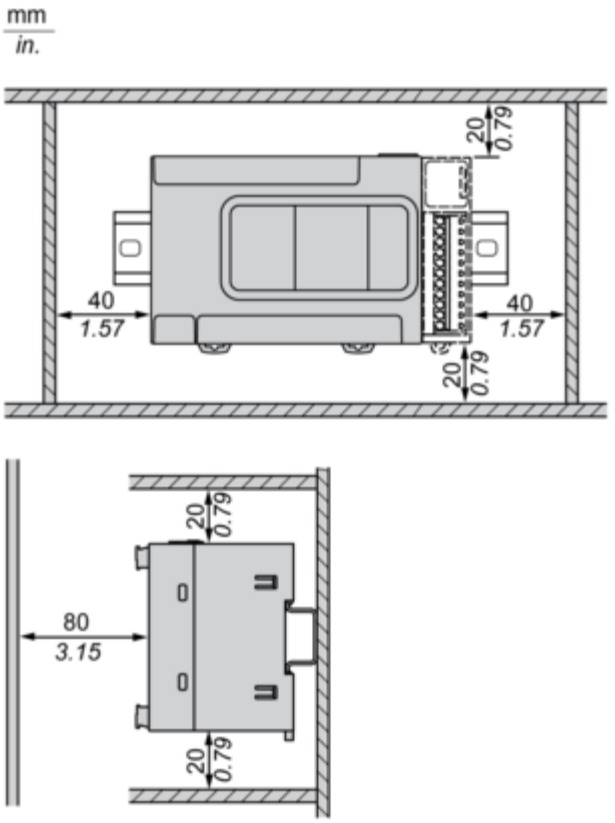

TMCR2•••Installation

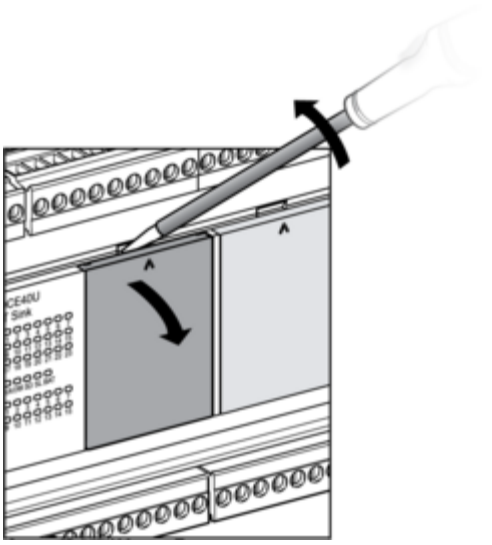

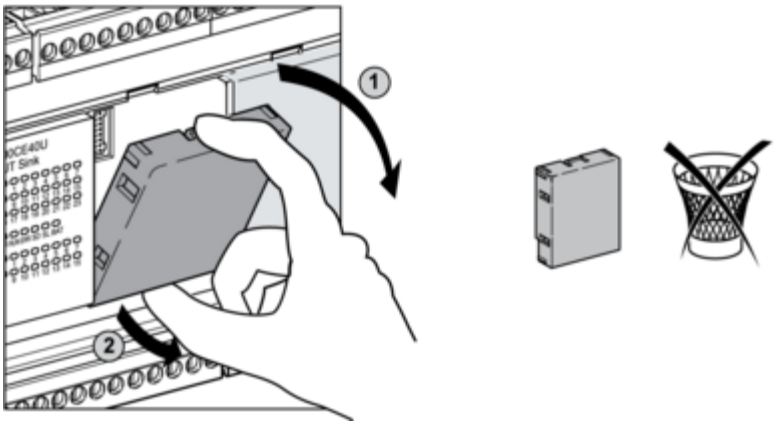

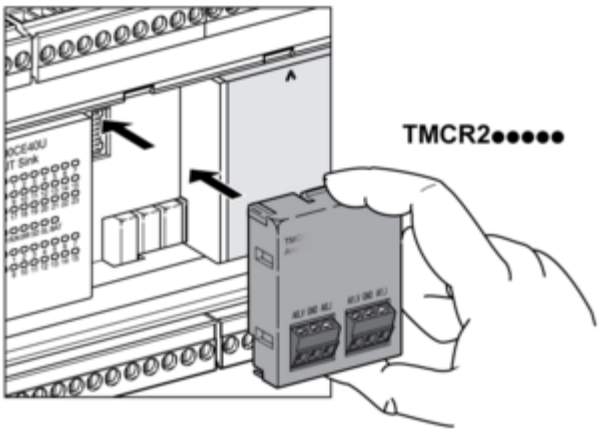

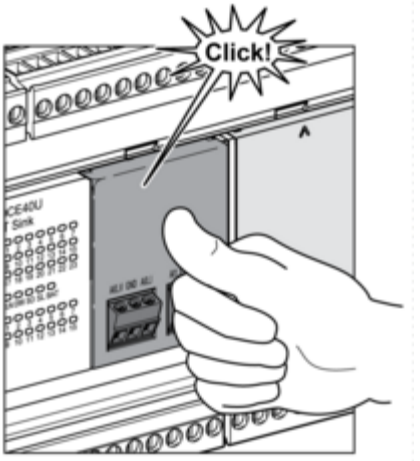

TMCR2••• De-Installation

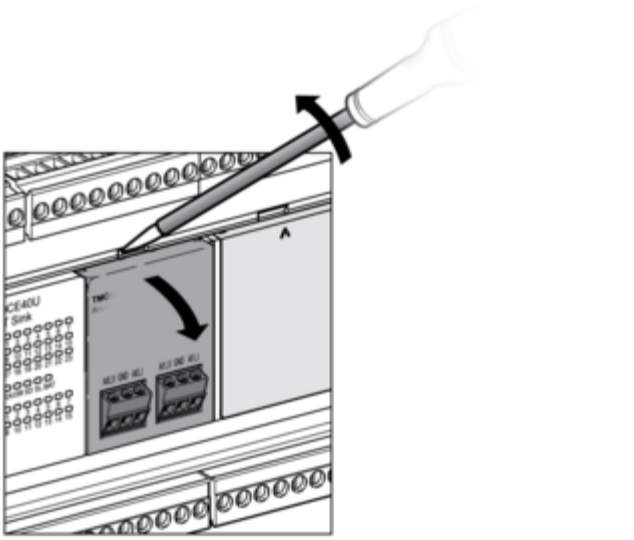

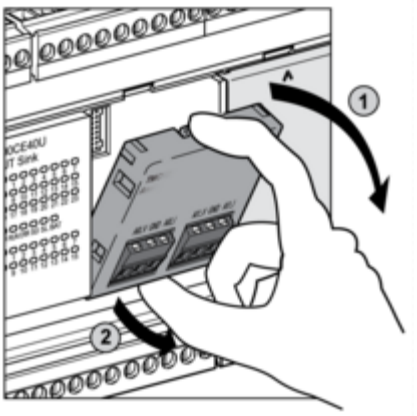
1
2

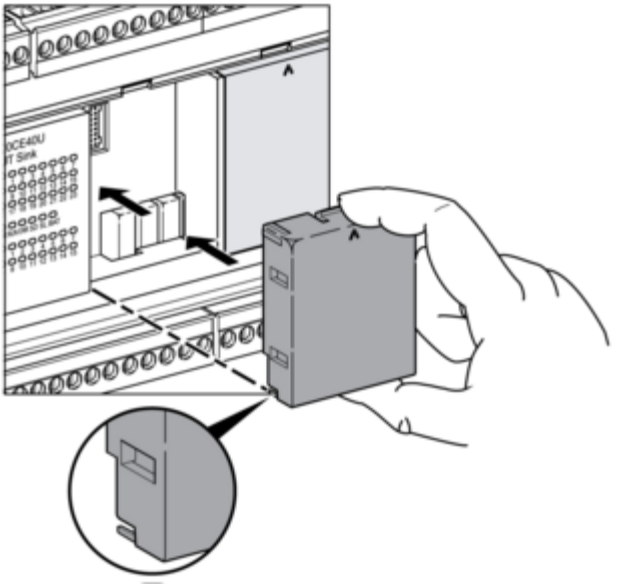

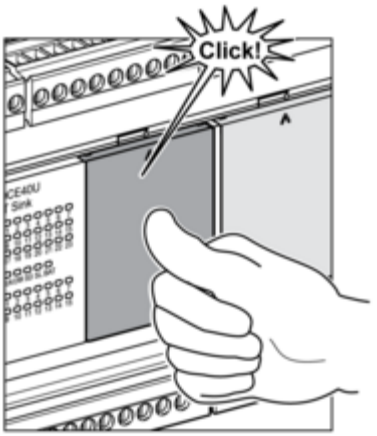
Click!

Connections and Schema

Wiring Diagram / Connections Schema

DC Power Supply

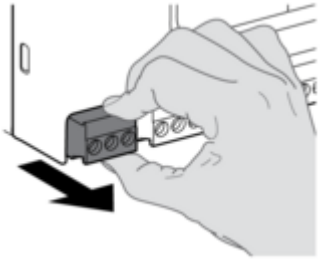

Digital Inputs (Sink or Source)

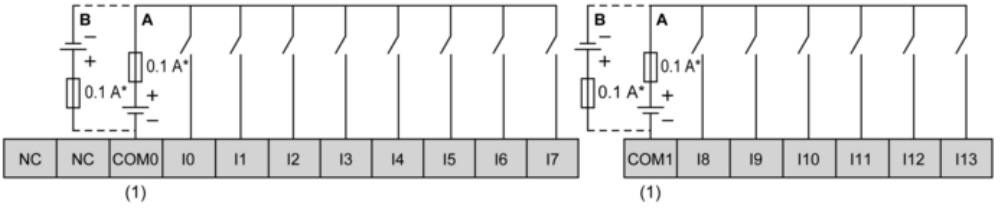

** I0...I7

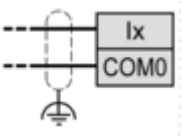

(*) Type T fuse
(**) Fast inputs
A Sink wiring (positive logic)
B Source wiring (negative logic)
(1) The COM0 and COM1 terminals are **not** connected internally.

Regular and Fast Transistor Output

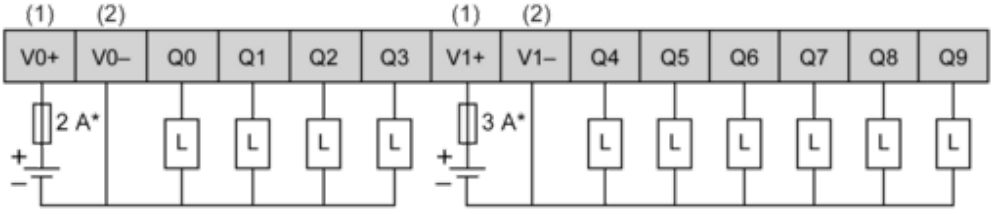

** Q0...Q3

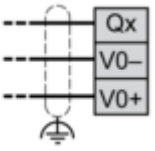

(*) Type T fuse
(**) Fast outputs
(1) The V0+ and V1+ terminals are not connected internally.

(2) The V0- and V1- terminals are not connected internally.

USB Mini-B Connection

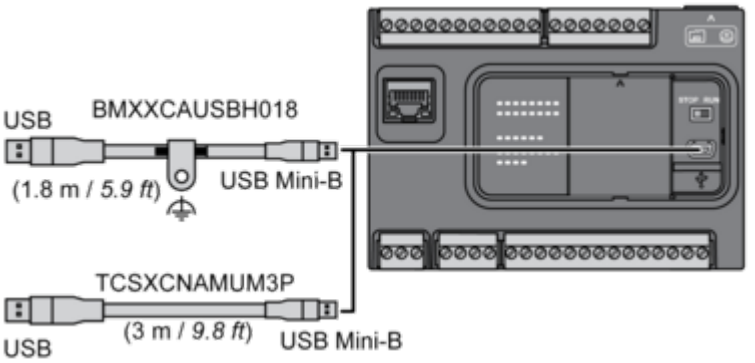
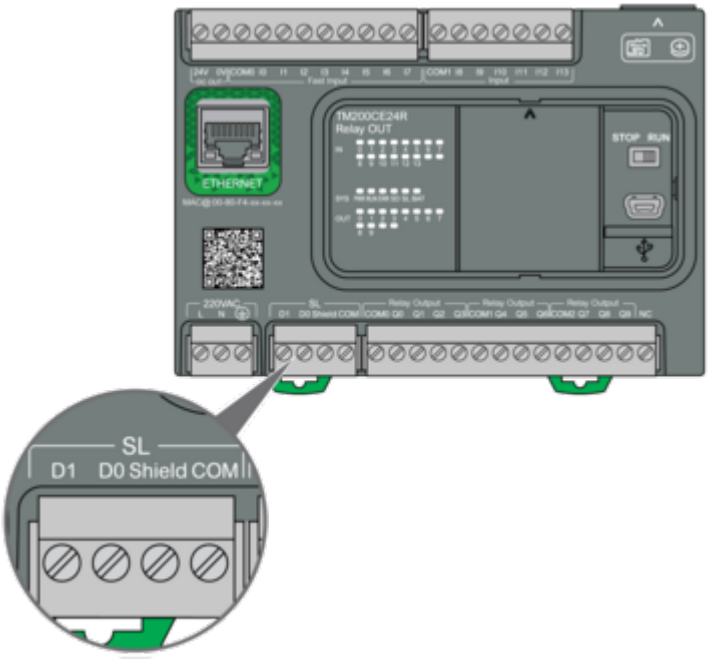
SL1 Connection