Product datasheet

Specifications

Green Premium™

controller M200 40 IO relay

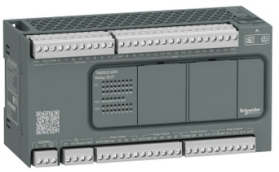

TM200C40R

Main

Range Of Product	Easy Modicon M200
Product Or Component Type	Logic controller
[Us] Rated Supply Voltage	100...240 V AC
Discrete I/O Number	40
Discrete Input Number	I2...I5: 4 fast input I0, I1, I6, I7: 4 high speed input I8...I23: 16 regular input
Discrete Output Number	16 relay
Discrete Input Voltage	24 V
Discrete Input Voltage Type	DC
Discrete Input Current	7 mA for input
Discrete Input Logic	Sink or source (positive/negative) type 1 conforming to IEC 61131-2
Discrete Output Voltage	24 V DC 220 V AC
Discrete Output Current	2 A
Discrete Output Type	Relay normally open
Power Consumption In Va	59…69 VA at 100...240 V AC (with max I/O)

Complementary

Maximum Number Of I/O Expansion Module	4 with 128 discrete output(s) for transistor output 4 with 80 discrete output(s) for relay output
Supply Voltage Limits	85…264 V
Network Frequency	50/60 Hz
Inrush Current	50 A
Voltage State 1 Guaranteed	>= 15 V for input
Voltage State 0 Guaranteed	<= 5 V for input
Input Impedance	3.3 kOhm for discrete input
Response Time	5 µs turn-off, I0, I1, I6, I7 terminal(s) for high speed input 5 µs turn-on, I0, I1, I6, I7 terminal(s) for high speed input 100 µs turn-off, I2...I5 terminal(s) for fast input 35 µs turn-on, I2...I5 terminal(s) for fast input 100 µs turn-off, I8...I13 terminal(s) for regular input 35 µs turn-on, I8...I13 terminal(s) for regular input 10 ms turn-off, Q0...Q15 terminal(s) for relay output 10 ms turn-on, Q0...Q15 terminal(s) for relay output 125 µs turn-off, I14...I23 terminal(s) for regular input 55 µs turn-on, I14...I23 terminal(s) for regular input

Disclaimer: This documentation is not intended as a substitute for and is not to be used for determining suitability or reliability of these products for specific user applications

Configurable Filtering Time	0 ms for input 3 ms for input 12 ms for input
Output Voltage Limits	30 V DC 250 V AC
Maximum Current Per Output Common	4 A at COM 2 4 A at COM 0 4 A at COM 1 4 A at COM 3
Electrical Durability	100000 cycles AC-12, 240 V, 480 VA, resistive 100000 cycles DC-12, 24 V, 48 W, resistive
Switching Frequency	0.1 Hz with maximum load
Mechanical Durability	20000000 cycles for relay output
Minimum Load	10 mA at 5 V DC for relay output
Memory Capacity	512 byte internal flash for backup of programs
Data Storage Equipment	32 GB micro SD card (optional)
Battery Type	BR2032 Li-CFx (Lithium-Carbon Monofluoride), battery life: 5 year(s)
Backup Time	3 years at 25 °C (by interruption of power supply)
Execution Time For 1 Kinstruction	0.3 ms for event and periodic task
Execution Time Per Instruction	0.2 µs Boolean
Exct Time For Event Task	60 µs response time
Clock Drift	<= 90 s/month at 25 °C
Regulation Loop	Adjustable PID regulator up to 14 simultaneous loops
Control Signal Type	Quadrature (x1, x2, x4) at 100 kHz for fast input (HSC mode) Pulse/direction at 100 kHz for fast input (HSC mode) Single phase at 100 kHz for fast input (HSC mode) CW/CCW at 100 kHz for fast input (HSC mode)
Counting Input Number	4 fast input (HSC mode) at 100 kHz 32 bits
Integrated Connection Type	USB port with mini B USB 2.0 connector Non isolated serial link serial 1 with terminal block connector and RS485 interface Non isolated serial link serial 2 with terminal block connector and RS232/RS485 interface Isolated serial link serial 2 with terminal block connector and RS485 interface
Transmission Rate	1.2...115.2 kbit/s (115.2 kbit/s by default) for bus length of 15 m for RS485 1.2...115.2 kbit/s (115.2 kbit/s by default) for bus length of 3 m for RS232 12 Mbit/s for USB
Communication Port Protocol	USB port: USB - SoMachine-Network Non isolated serial link: Modbus master/slave - RTU/ASCII or SoMachine-Network
Local Signalling	1 LED (green) for PWR 1 LED (green) for RUN 1 LED (red) for module error (ERR) 1 LED (green) for SD card access (SD) 1 LED (red) for BAT 1 LED (green) for SL1 1 LED per channel (green) for I/O state
Electrical Connection	Mini B USB 2.0 connectorfor a programming terminal removable screw terminal blockfor inputs removable screw terminal blockfor outputs removable screw terminal block, 4 terminal(s) for connecting the serial link1 removable screw terminal block, 3 terminal(s) for connecting the 100-240 V AC power supply
Maximum Cable Distance Between Devices	Unshielded cable: <50 m for input Shielded cable: <10 m for fast input Shielded cable: <10 m for high speed input Unshielded cable: <150 m for output

Insulation	Non-insulated between inputs Between output and internal logic at 1780 V AC Between output groups at 1780 V AC Between supply and internal logic at 1780 V AC Between input and internal logic at 500 V AC Between fast input and internal logic at 500 V AC Between input groups at 500 V AC
Sensor Power Supply	24 V DC at 300 mA supplied by the controller
Marking	CE
Mounting Support	Top hat type TH35-15 rail conforming to IEC 60715 Top hat type TH35-7.5 plate or panel with fixing kit conforming to IEC 60715
Height	90 mm
Depth	70 mm
Width	175 mm
Net Weight	0.504 kg

Environment

Ip Degree Of Protection	IP20 with protective cover in place
Product Certifications	IACS E10 cULus RCM CSA
Standards	IEC 61010-2-201 IEC 61131-2
Electromagnetic Compatibility	Electrostatic discharge immunity test - test level: 8 kV (air discharge) conforming to IEC 61000-4-2 Electrostatic discharge immunity test - test level: 6 kV (contact discharge) conforming to IEC 61000-4-2 Susceptibility to electromagnetic fields - test level: 10 V/m (80 MHz...3 GHz) conforming to IEC 61000-4-3 Magnetic field at power frequency - test level: 30 A/m conforming to IEC 61000-4-8 Electrical fast transient/burst immunity test - test level: 2 kV (power lines) conforming to IEC 61000-4-4 Electrical fast transient/burst immunity test - test level: 2 kV (relay output) conforming to IEC 61000-4-4 Electrical fast transient/burst immunity test - test level: 1 kV (I/O) conforming to IEC 61000-4-4 Electrical fast transient/burst immunity test - test level: 1 kV (serial link) conforming to IEC 61000-4-4 1.2/50 µs shock waves immunity test - test level: 1 kV (power lines (DC)) conforming to IEC 61000-4-5 1.2/50 µs shock waves immunity test - test level: 2 kV (power lines (AC)) conforming to IEC 61000-4-5 1.2/50 µs shock waves immunity test - test level: 2 kV (relay output) conforming to IEC 61000-4-5 1.2/50 µs shock waves immunity test - test level: 1 kV (I/O) conforming to IEC 61000-4-5 1.2/50 µs shock waves immunity test - test level: 1 kV (shielded cable) conforming to IEC 61000-4-5 1.2/50 µs shock waves immunity test - test level: 0.5 kV (power lines (DC)) conforming to IEC 61000-4-5 1.2/50 µs shock waves immunity test - test level: 1 kV (power lines (AC)) conforming to IEC 61000-4-5 Conducted RF disturbances - test level: 10 V (0.15...80 MHz) conforming to IEC 61000-4-6 Conducted emission - test level: 79 dBµV/m QP/66 dBµV/m AV (power lines (AC)) conforming to IEC 55011 Conducted emission - test level: 73 dBµV/m QP/60 dBµV/m AV (power lines (AC)) conforming to IEC 55011 Radiated emission - test level: 40 dBµV/m QP class A (10 m) conforming to IEC 55011 Radiated emission - test level: 47 dBµV/m QP class A (10 m) conforming to IEC 55011
Shock Resistance	15 gn for 11 ms 30 gn for 6 ms

Immunity To Microbreaks	10 ms
Vibration Resistance	3.5 mm at 5…8.4 Hz on symmetrical rail 1 gn at 8.4…150 Hz on symmetrical rail 3.5 mm at 5…8.7 Hz on panel mounting 2 gn at 8.7…150 Hz on panel mounting
Relative Humidity	10…95 %, without condensation (in operation) 10…95 %, without condensation (in storage)
Ambient Air Temperature For Operation	0…55 °C (horizontal installation)
Ambient Air Temperature For Storage	-25…70 °C
Pollution Degree	<= 2
Operating Altitude	0...2000 m
Storage Altitude	0…3000 m

Packing Units

Unit Type Of Package 1	PCE
Number Of Units In Package 1	1
Package 1 Height	9.388 cm
Package 1 Width	13.744 cm
Package 1 Length	18.809 cm
Package 1 Weight	767.5 g
Unit Type Of Package 2	S03
Number Of Units In Package 2	12
Package 2 Height	30 cm
Package 2 Width	30 cm
Package 2 Length	40 cm
Package 2 Weight	9716 g
Unit Type Of Package 3	P12
Number Of Units In Package 3	288
Package 3 Height	95 cm
Package 3 Width	80 cm
Package 3 Length	120 cm
Package 3 Weight	242184 g

Sustainability

Green Premium™ label is Schneider Electric's commitment to delivering products with best-in-class environmental performance. Green Premium promises compliance with the latest regulations, transparency on environmental impacts, as well as circular and low-CO_2 products.

Guide to assessing product sustainability is a white paper that clarifies global eco-label standards and how to interpret environmental declarations.

Learn more about Green Premium >

Guide to assess a product's sustainability >

Transparency RoHS/REACh

Well-being performance

Mercury Free

Rohs Exemption Information	Yes

Certifications & Standards

Reach Regulation	REACh Declaration
Eu Rohs Directive	Pro-active compliance (Product out of EU RoHS legal scope)
China Rohs Regulation	China RoHS declaration
Environmental Disclosure	Product Environmental Profile
Weee	The product must be disposed on European Union markets following specific waste collection and never end up in rubbish bins
Circularity Profile	End of Life Information

Dimensions Drawings

Dimensions Drawings

Dimensions

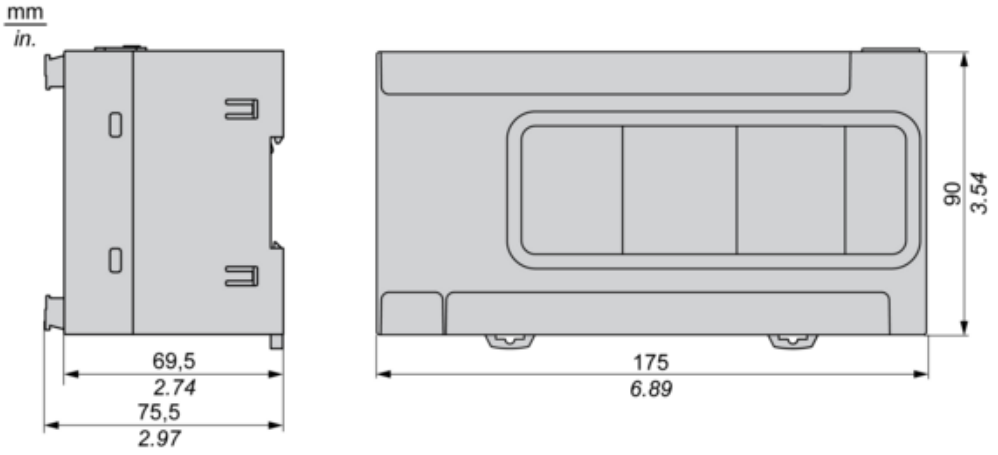

Mounting and Clearance

Mounting and Clearance

Mounting on a Rail

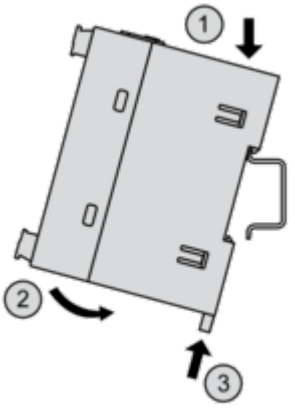

Direct Mounting on a Panel Surface

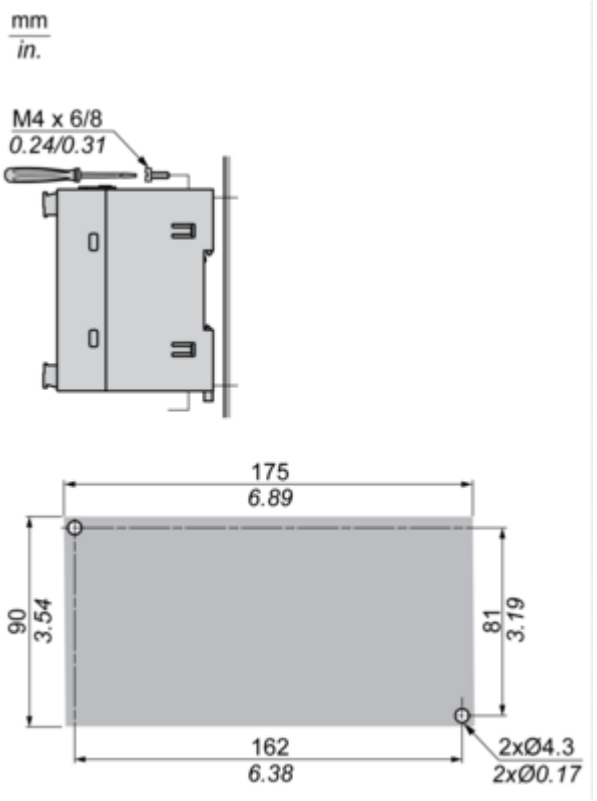

Mounting Position

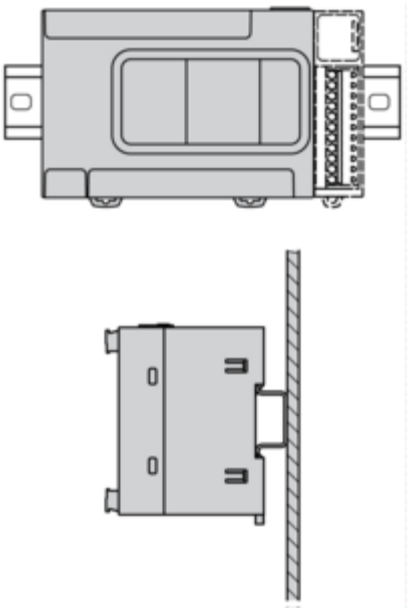

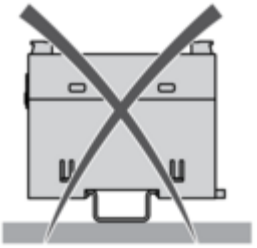

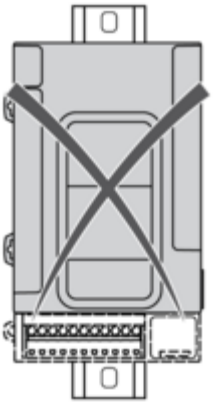

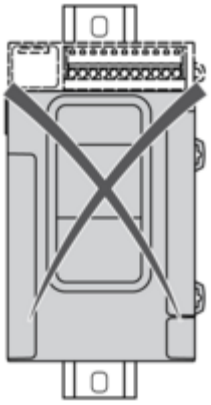

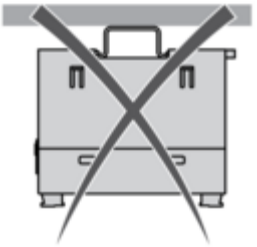

Clearance

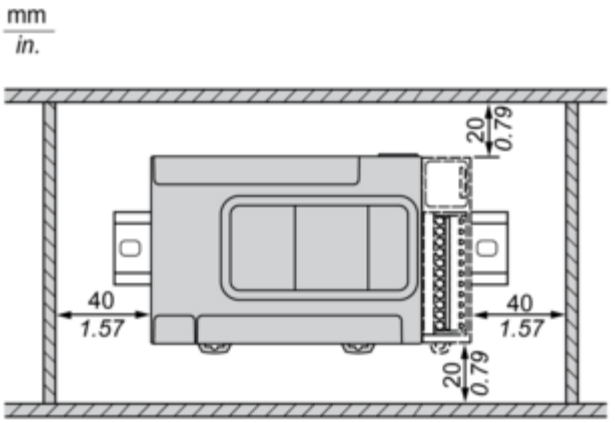

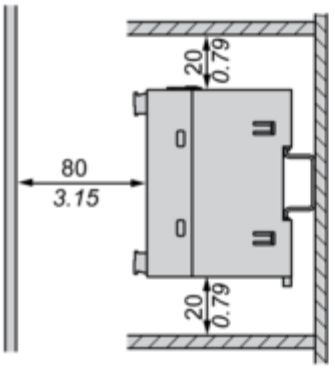

TMCR2•••Installation

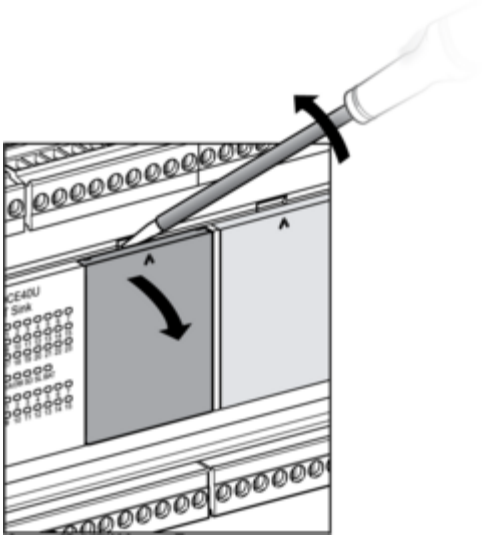

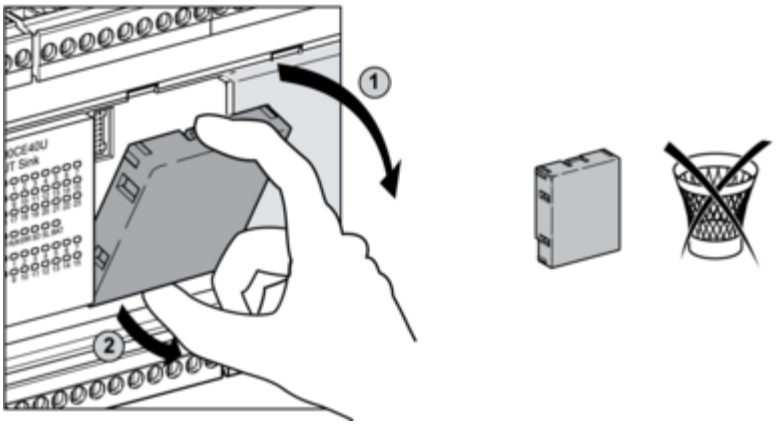

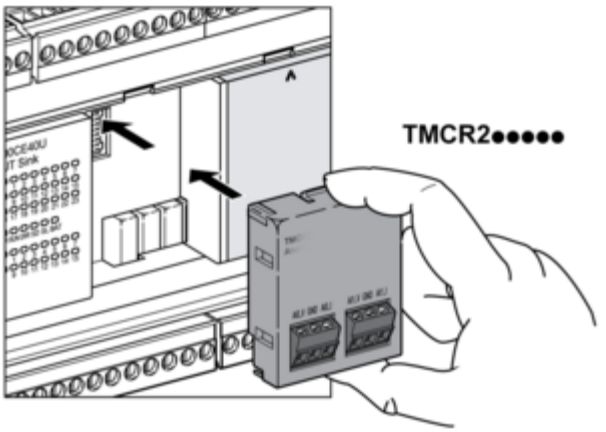

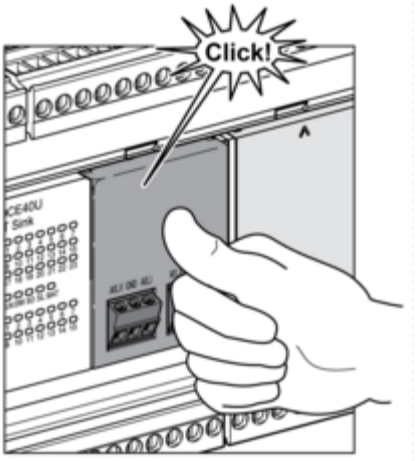

TMCR2••• De-Installation

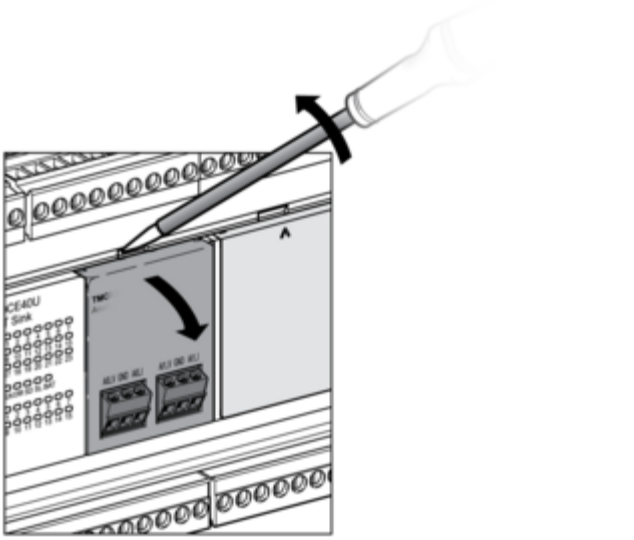

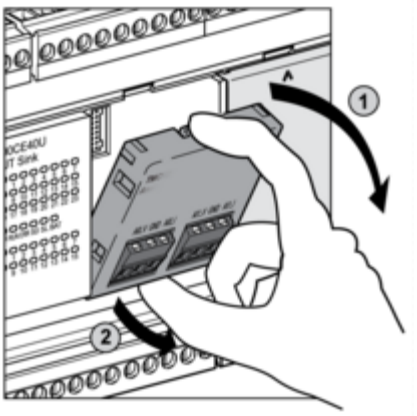
1
2

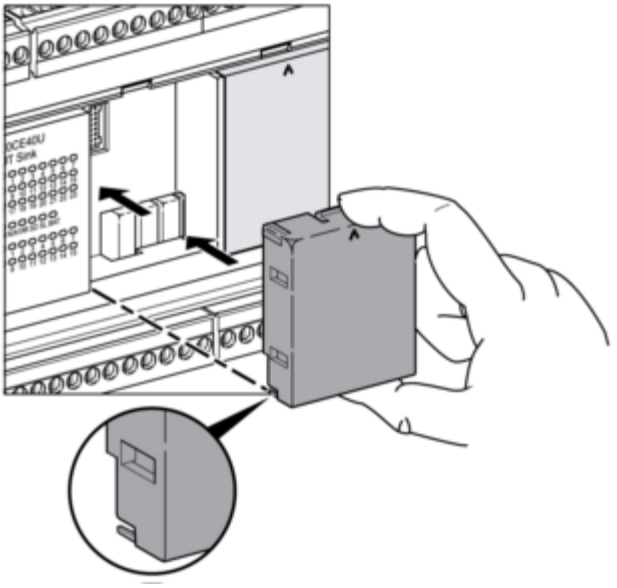

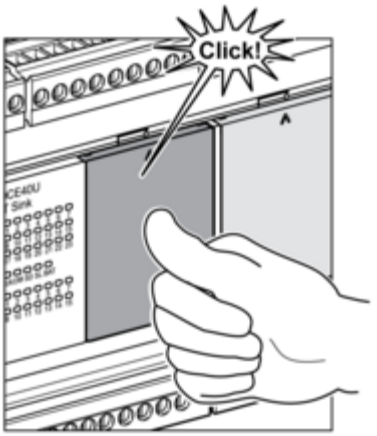
Click!

Connections and Schema

Wiring Diagram / Connections Schema

AC Power Supply

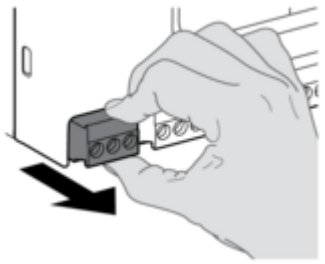

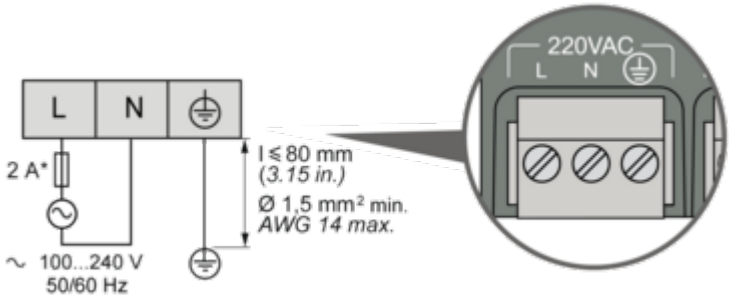

(*) Type T fuse

Digital Inputs Positive Logic (Sink)

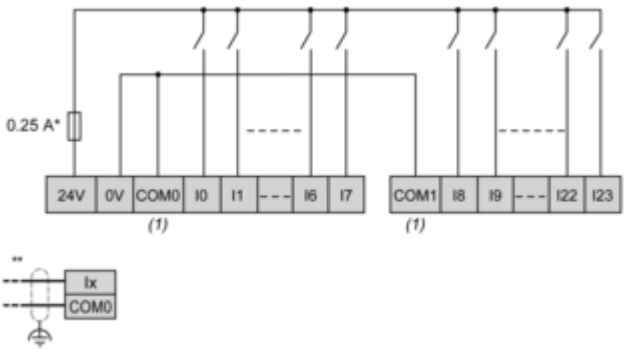

(*) Type T fuse
(**) Fast inputs
(1) The COM0 and COM1 terminals are **not** connected internally.

Digital Inputs Negative Logic (Source)

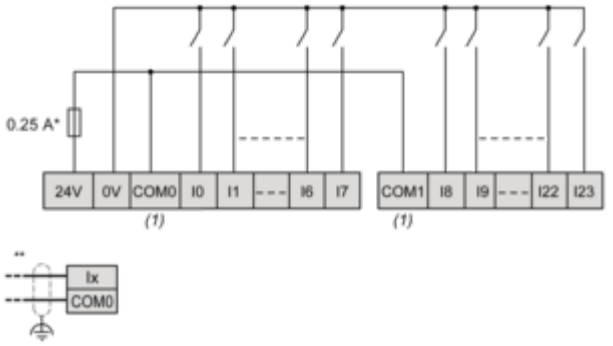

(*) Type T fuse
(**) Fast inputs
(1) The COM0 and COM1 terminals are **not** connected internally.

Relay Outputs - Negative Logic (Sink)

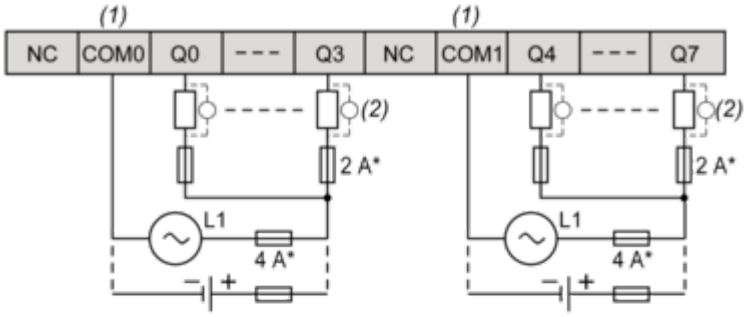

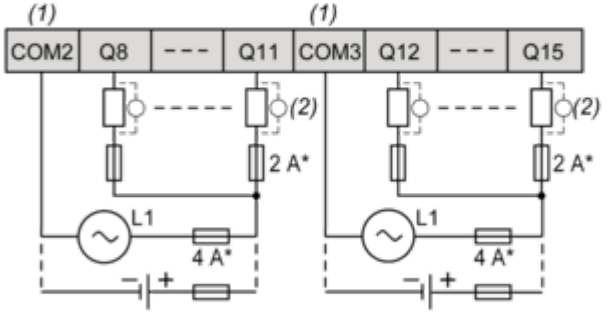

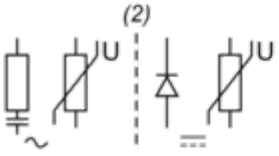

(*) Type T fuse
(1) The COM0 and COM1 terminals are **not** connected internally.
(2) A free wheeling diode or an RC snubber

Relay Outputs - Positive Logic (Source)

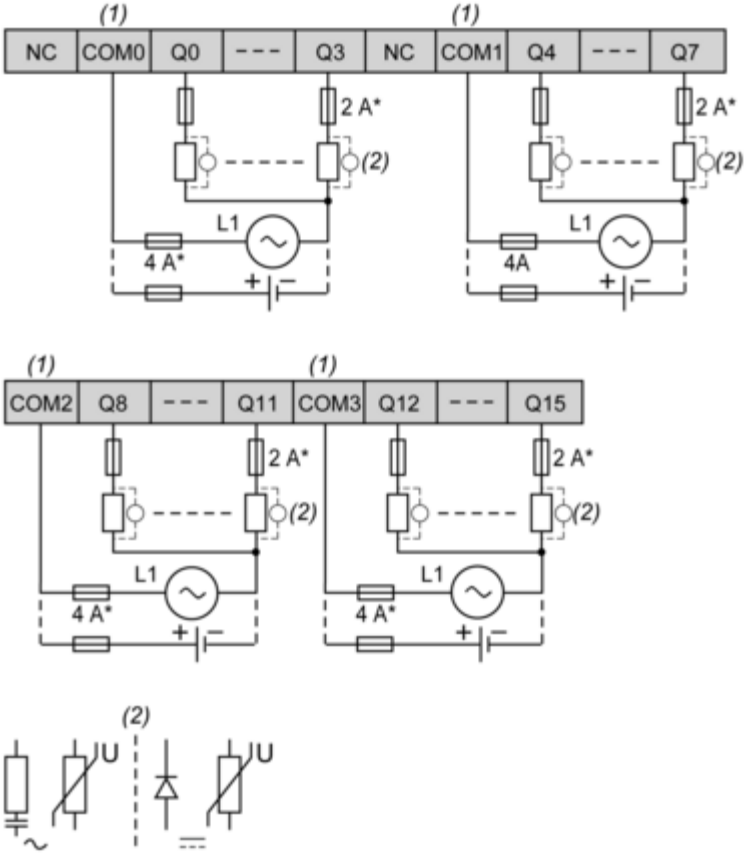

(*) Type T fuse
(1) The COM0 and COM1 terminals are **not** connected internally.
(2) A free wheeling diode or an RC snubber

USB Mini-B Connection

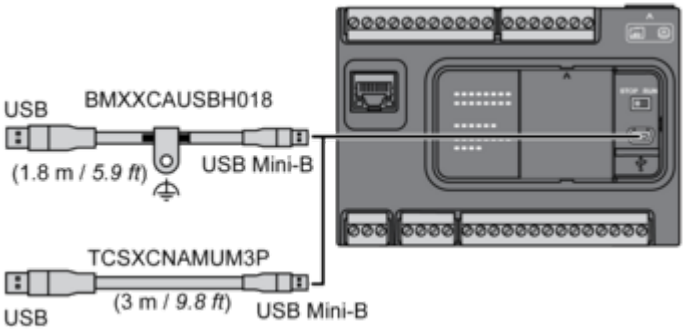

SL1 Connection

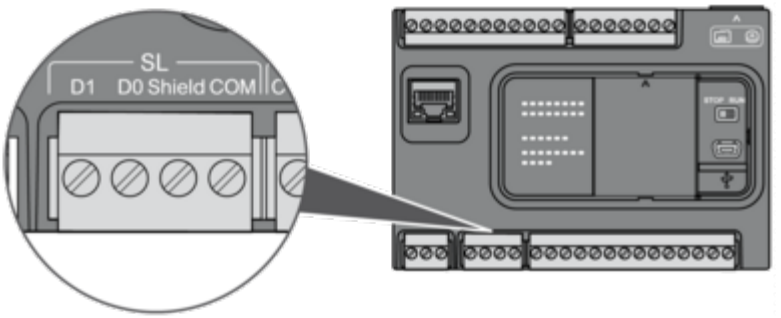

D1 : D1 (A+)
D0 : D0 (B-)
Shield : Shield
COM : O V Com