Product datasheet

Specifications

Green Premium™

logic controller, Modicon M241, 40 IO, transistor, PNP

TM241C40T

Main

Range Of Product	Modicon M241
Product Or Component Type	Logic controller
[Us] Rated Supply Voltage	24 V DC
Discrete Input Number	24, discrete input 8 fast input conforming to IEC 61131-2 Type 1
Discrete Output Type	Transistor
Discrete Output Number	16 transistor 4 fast output
Discrete Output Voltage	24 V DC for transistor output
Discrete Output Current	0.1 A for fast output (PTO mode) (Q0...Q3) 0.5 A for transistor output (Q0...Q15)

Complementary

Discrete I/O Number	40
Maximum Number Of I/O Expansion Module	7 (local I/O-Architecture) 14 (remote I/O-Architecture)
Supply Voltage Limits	20.4…28.8 V
Inrush Current	50 A
Power Consumption In W	32.6…40.4 W (with max number of I/O expansion module)
Discrete Input Logic	Sink or source
Discrete Input Voltage	24 V
Discrete Input Voltage Type	DC
Voltage State 1 Guaranteed	>= 15 V for input
Voltage State 0 Guaranteed	<= 5 V for input
Discrete Input Current	10.7 mA for fast input 7 mA for input
Input Impedance	4.7 kOhm for input 2.81 kOhm for fast input
Response Time	<= 2 µs turn-on, I0...I7 terminal(s) for fast input <= 2 µs turn-off, I0...I7 terminal(s) for fast input <= 2 µs turn-on, Q0...Q3 terminal(s) for fast output <= 2 µs turn-off, Q0...Q3 terminal(s) for fast output 50 µs turn-on, I0...I15 terminal(s) for input 50 µs turn-off, I0...I15 terminal(s) for input <= 34 µs turn-on, Q0...Q15 terminal(s) for output <= 250 µs turn-off, Q0...Q15 terminal(s) for output

Disclaimer: This documentation is not intended as a substitute for and is not to be used for determining suitability or reliability of these products for specific user applications

Configurable Filtering Time	1 µs for fast input 12 ms for fast input 0 ms for input 1 ms for input 4 ms for input 12 ms for input
Discrete Output Logic	Positive logic (source)
Output Voltage Limits	30 V DC
Maximum Current Per Output Common	2 A
Maximum Output Frequency	20 kHz for fast output (PWM mode) 100 kHz for fast output (PLS mode) 1 kHz for output
Accuracy	+/- 0.1 % at 0.02…0.1 kHz for fast output +/- 1 % at 0.1…1 kHz for fast output
Maximum Leakage Current	5 µA for output
Maximum Voltage Drop	<1 V
Maximum Tungsten Load	<2.4 W
Protection Type	Short-circuit protection Short-circuit and overload protection with automatic reset Reverse polarity protection for fast output
Reset Time	10 ms automatic reset output 12 s automatic reset fast output
Memory Capacity	64 MB for system memory RAM
Data Backed Up	128 MB built-in flash memory for backup of user programs
Data Storage Equipment	<= 16 GB SD card (optional)
Battery Type	BR2032 lithium non-rechargeable, battery life: 4 year(s)
Backup Time	2 years at 25 °C
Execution Time For 1 Kinstruction	0.3 ms for event and periodic task 0.7 ms for other instruction
Application Structure	8 event tasks 8 external event tasks 4 cyclic master tasks 3 cyclic master tasks + 1 freewheeling task
Realtime Clock	With
Clock Drift	<= 60 s/month at 25 °C
Positioning Functions	PTO function 4 channel(s) (positioning frequency: 100 kHz) PTO function 4 channel(s) for transistor output (positioning frequency: 1 kHz)
Counting Input Number	4 fast input (HSC mode) at 200 kHz 16 standard input at 1 kHz
Control Signal Type	A/B at 100 kHz for fast input (HSC mode) Pulse/direction at 200 kHz for fast input (HSC mode) Single phase at 200 kHz for fast input (HSC mode)
Integrated Connection Type	Non isolated serial link serial 1 with RJ45 connector and RS232/RS485 interface Non isolated serial link serial 2 with removable screw terminal block connector and RS485 interface USB port with mini B USB 2.0 connector
Supply	(serial 1)serial link supply: 5 V, <200 mA
Transmission Rate	1.2...115.2 kbit/s (115.2 kbit/s by default) for bus length of 15 m for RS485 1.2...115.2 kbit/s (115.2 kbit/s by default) for bus length of 3 m for RS232 480 Mbit/s for bus length of 3 m for USB
Communication Port Protocol	Non isolated serial link: Modbus master/slave

Local Signalling	1 LED (green) for PWR 1 LED (green) for RUN 1 LED (red) for module error (ERR) 1 LED (red) for I/O error (I/O) 1 LED (green) for SD card access (SD) 1 LED (red) for BAT 1 LED (green) for SL1 1 LED (green) for SL2 1 LED (red) for bus fault on TM4 (TM4) 1 LED per channel (green) for I/O state
Electrical Connection	removable screw terminal blockfor inputs and outputs (pitch 5.08 mm) removable screw terminal blockfor connecting the 24 V DC power supply (pitch 5.08 mm)
Maximum Cable Distance Between Devices	Unshielded cable: <50 m for input Shielded cable: <10 m for fast input Unshielded cable: <50 m for output Shielded cable: <3 m for fast output
Insulation	Between supply and internal logic at 500 V AC Non-insulated between supply and ground Between input and internal logic at 500 V AC Non-insulated between inputs Between fast input and internal logic at 500 V AC Between output and internal logic at 500 V AC Non-insulated between outputs Between fast output and internal logic at 500 V AC Between output groups at 500 V AC
Marking	CE
Surge Withstand	1 kV power lines (DC) common mode conforming to IEC 61000-4-5 1 kV shielded cable common mode conforming to IEC 61000-4-5 0.5 kV power lines (DC) differential mode conforming to IEC 61000-4-5 1 kV relay output differential mode conforming to IEC 61000-4-5 1 kV input common mode conforming to IEC 61000-4-5 1 kV transistor output common mode conforming to IEC 61000-4-5
Mounting Support	Top hat type TH35-15 rail conforming to IEC 60715 Top hat type TH35-7.5 rail conforming to IEC 60715 plate or panel with fixing kit
Height	90 mm
Depth	95 mm
Width	190 mm
Net Weight	0.62 kg

Environment

Standards	ANSI/ISA 12-12-01 CSA C22.2 No 142 CSA C22.2 No 213 IEC 61131-2:2007 Marine specification (LR, ABS, DNV, GL) UL 508
Product Certifications	RCM cULus CE UKCA DNV-GL ABS LR
Resistance To Electrostatic Discharge	8 kV in air conforming to IEC 61000-4-2 4 kV on contact conforming to IEC 61000-4-2
Resistance To Electromagnetic Fields	10 V/m 80 MHz...1 GHz conforming to IEC 61000-4-3 3 V/m 1.4 GHz...2 GHz conforming to IEC 61000-4-3 1 V/m 2 GHz...3 GHz conforming to IEC 61000-4-3

Resistance To Fast Transients	2 kV (power lines) conforming to IEC 61000-4-4 1 kV (serial link) conforming to IEC 61000-4-4 1 kV (input) conforming to IEC 61000-4-4 1 kV (transistor output) conforming to IEC 61000-4-4
Resistance To Conducted Disturbances	10 V 0.15...80 MHz conforming to IEC 61000-4-6 3 V 0.1...80 MHz conforming to Marine specification (LR, ABS, DNV, GL) 10 V spot frequency (2, 3, 4, 6.2, 8.2, 12.6, 16.5, 18.8, 22, 25 MHz) conforming to Marine specification (LR, ABS, DNV, GL)
Electromagnetic Emission	Conducted emissions - test level: 120...69 dBµV/m QP (power lines) at 10…150 kHz conforming to IEC 55011 Conducted emissions - test level: 63 dBµV/m QP (power lines) at 1.5…30 MHz conforming to IEC 55011 Radiated emissions - test level: 40 dBµV/m QP class A at 30…230 MHz conforming to IEC 55011 Conducted emissions - test level: 79...63 dBµV/m QP (power lines) at 150…1500 kHz conforming to IEC 55011 Radiated emissions - test level: 47 dBµV/m QP class A at 230…1000 MHz conforming to IEC 55011
Immunity To Microbreaks	10 ms
Ambient Air Temperature For Operation	-10…50 °C (vertical installation) -10…55 °C (horizontal installation)
Ambient Air Temperature For Storage	-25…70 °C
Relative Humidity	10…95 %, without condensation (in operation) 10…95 %, without condensation (in storage)
Ip Degree Of Protection	IP20 with protective cover in place
Pollution Degree	2
Operating Altitude	0...2000 m
Storage Altitude	0…3000 m
Vibration Resistance	3.5 mm at 5…8.4 Hz on symmetrical rail 3 gn at 8.4…150 Hz on symmetrical rail 3.5 mm at 5…8.4 Hz on panel mounting 3 gn at 8.4…150 Hz on panel mounting
Shock Resistance	15 gn for 11 ms

Packing Units

Unit Type Of Package 1	PCE
Number Of Units In Package 1	1
Package 1 Height	11.5 cm
Package 1 Width	13.094 cm
Package 1 Length	22.928 cm
Package 1 Weight	760.0 g
Unit Type Of Package 2	S03
Number Of Units In Package 2	6
Package 2 Height	30 cm
Package 2 Width	30 cm
Package 2 Length	40 cm
Package 2 Weight	5.441 kg
Unit Type Of Package 3	P06
Number Of Units In Package 3	48
Package 3 Height	75.0 cm

Package 3 Width	60.0 cm
Package 3 Length	80.0 cm
Package 3 Weight	52 kg

Sustainability

Green Premium™ label is Schneider Electric's commitment to delivering products with best-in-class environmental performance. Green Premium promises compliance with the latest regulations, transparency on environmental impacts, as well as circular and low-CO_2 products.

Guide to assessing product sustainability is a white paper that clarifies global eco-label standards and how to interpret environmental declarations.

Learn more about Green Premium >

Guide to assess a product's sustainability >

Transparency RoHS/REACh

Well-being performance

Mercury Free	
Rohs Exemption Information	Yes
Pvc Free	

Certifications & Standards

Reach Regulation	REACh Declaration
Eu Rohs Directive	Pro-active compliance (Product out of EU RoHS legal scope)
China Rohs Regulation	China RoHS declaration
Environmental Disclosure	Product Environmental Profile
Weee	The product must be disposed on European Union markets following specific waste collection and never end up in rubbish bins
Circularity Profile	End of Life Information

Dimensions Drawings

Dimensions

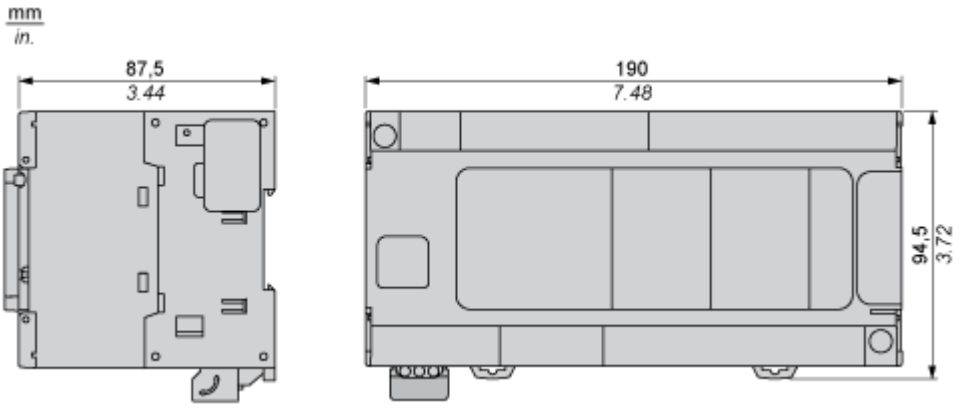

Mounting and Clearance

Clearance

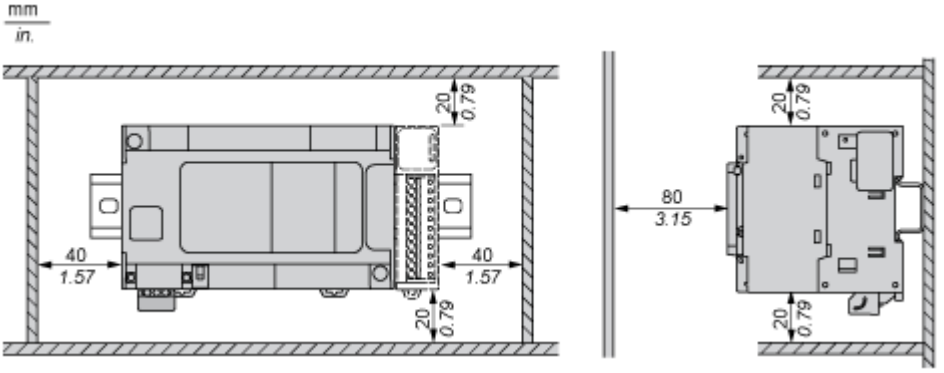

Mounting Position

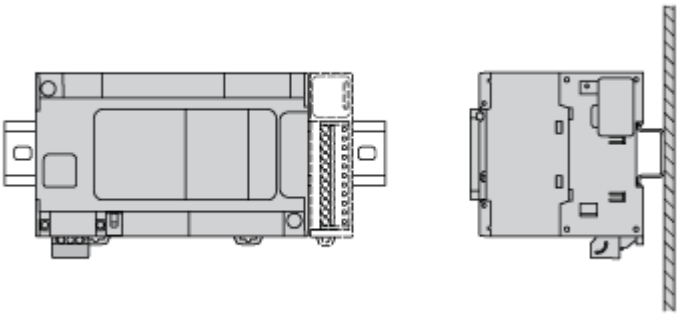

Acceptable Mounting

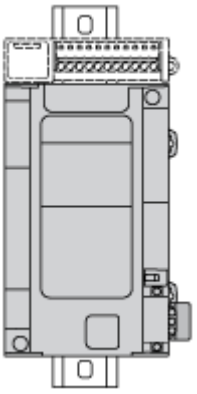

NOTE: Expansion modules must be mounted above the logic controller.

Incorrect Mounting

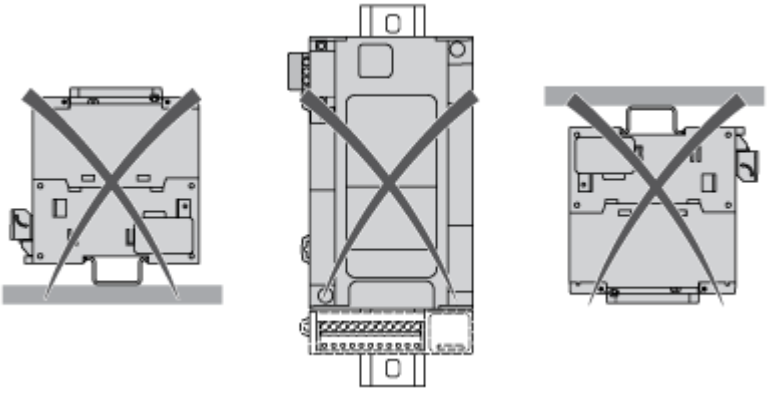

Direct Mounting On a Panel Surface

Mounting Hole Layout

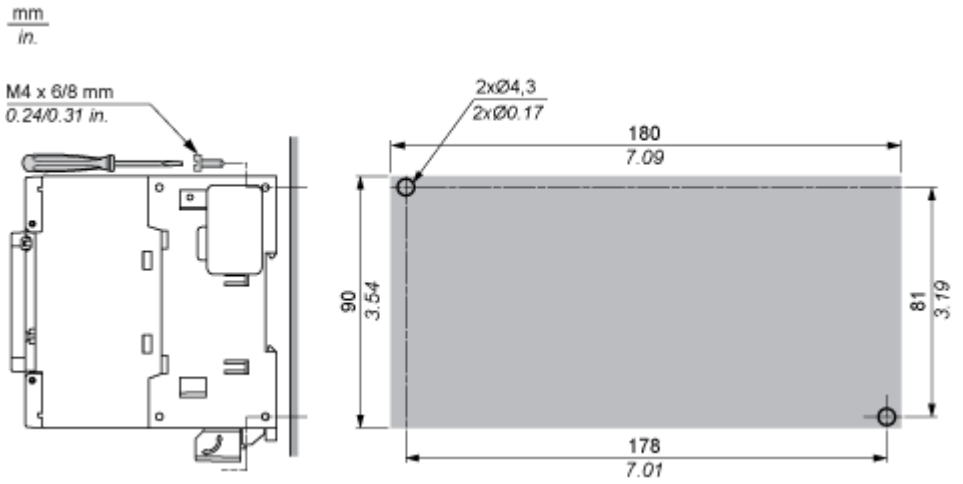

Connections and Schema

Digital Inputs

Wiring Diagram

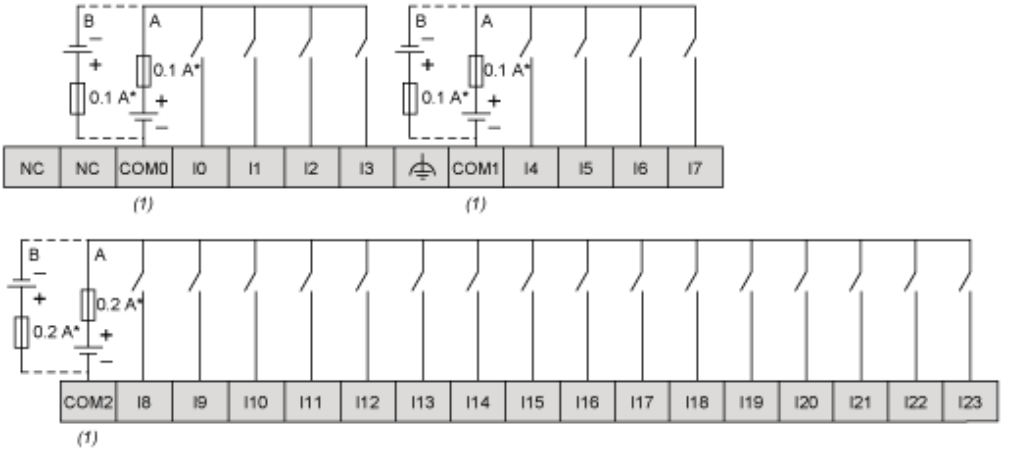

(*) : Type T fuse

(1) : The COM0, COM1 and COM2 terminals are not connected internally

(A) : Sink wiring (positive logic)

(B) : Source wiring (negative logic)

Fast Input Wiring (I0...I7)

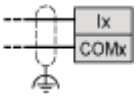

Fast Transistor Outputs

Wiring Diagram

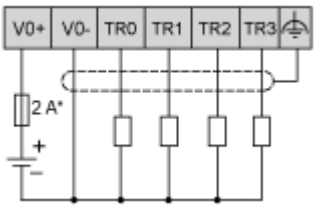

(*) : 2 A fast-blow fuse

Transistor Outputs

Wiring Diagram

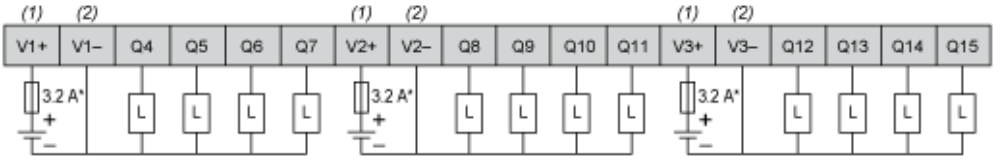

(*) : Type T fuse

(1) : The V1+, V2+ and V3+ terminals are not connected internally.

(2) : The V1–, V2– and V3– terminals are not connected internally.
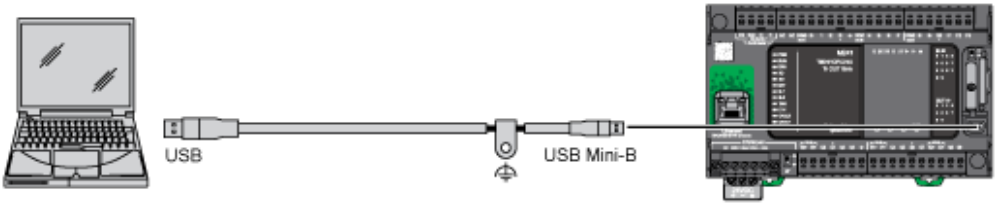
USB Mini-B Connection