Product datasheet

Specifications

Green Premium™

logic controller, Modicon M262, 5ns per instruction, Ethernet

TM262L10MESE8T

Main

Range Of Product	Logic/motion controller - Modicon M262
Product Or Component Type	Logic controller
[Us] Rated Supply Voltage	24 V DC - 15...20 %
Discrete I/O Number	8
Upstream Connectivity	IIoT-ready machine to cloud Connected machine to plant

Complementary

Supply Voltage Limits	20.4…28.8 V DC
Plc Power Consumption	82 W
Inrush Current	40 A
Number Of Overvoltage Protection	With
Discrete Input Number	4, discrete input fast input conforming to IEC 61131-2 Type 1
Discrete Input Voltage	24 V
Discrete Input Voltage Type	DC
Discrete Input Logic	Sink
Voltage State 1 Guaranteed	>= 15 V for DC
Voltage State 0 Guaranteed	<= 5 V for DC
Discrete Input Current	7.5 mA for fast input
Input Impedance	2.81 kOhm for input
Response Time	<= 1 µs turn-on, I0...I3 terminal(s) for fast input <= 1 µs turn-off, I0...I3 terminal(s) for fast input <= 1 µs turn-on, Q0...Q3 terminal(s) for fast output <= 1 µs turn-off, Q0...Q3 terminal(s) for fast output
Configurable Filtering Time	0.001 ms for fast input 0.002 ms for fast input 0.005 ms for fast input 0.01 ms for fast input 0.05 ms for fast input 0.1 ms for fast input 0.5 ms for fast input 1 ms for fast input 4 ms for fast input 12 ms for fast input
Discrete Output Number	4 transistor fast output
Discrete Output Voltage	24 V DC
Discrete Output Current	0.5 A for fast output (Q0...Q3)

Disclaimer: This documentation is not intended as a substitute for and is not to be used for determining suitability or reliability of these products for specific user applications

Discrete Output Type	Transistor
Discrete Output Logic	Source
Output Voltage Limits	30 V DC
Maximum Current Per Output Common	0.5 A with Q0...Q3 for fast output
Maximum Output Frequency	300 kHz
Accuracy	+/- 0.1 % at 0.02…0.1 kHz for fast output +/- 1 % at 0.1…1 kHz for fast output
Maximum Leakage Current	10 µA for output
Maximum Tungsten Load	<1.5 W
Protection Type	Short-circuit and overload protection with automatic reset Reverse polarity protection Short-circuit protection
Reset Time	200 ms automatic reset fast output
Maximum Number Of I/O Expansion Module	7TM3 IO module (local I/O-Architecture) 7TM3 IO module (remote I/O-Architecture) 64TM3, TM5 or TM7 IO island (distributed I/O-Architecture)
Execution Time For 1 Kinstruction	0.005 ms
Memory Capacity	32 MB for program RAM 32 MB for OS/website RAM 192 MB for system memory RAM
Data Backed Up	1 GB built-in flash memory for backup of user programs
Data Storage Equipment	<= 32 GB SDHC card (optional)
Backup Time	1000 h at 25 °C
Application Structure	8 event tasks 4 cyclic master tasks 3 cyclic master tasks + 1 freewheeling task 8 external event tasks
Realtime Clock	With
Clock Drift	<= 10 s/month at 25 °C
Cycle Time	0.5 ms
Positioning Functions	Libraries axes coordinated function
Integrated Connection Type	Ethernet 1 with RJ45 connector and 10/100BASE-T interface Ethernet 2 with 2 RJ45 connector and 100/1000BASE-T interface Serial link with RJ45 connector and RS232/RS485 interface Smart Communication Bus TM3 IO bus USB type mini B
Transmission Rate	115 kbit/s for bus length of 15 m for RS485 115 kbit/s for bus length of 3 m for RS232 480 Mbit/s for bus length of 3 m for USB 10/100 Mbit/s for Ethernet1 10/100/1000 Mbit/s for Ethernet2
Communication Port Protocol	EtherNet/IP adapter EtherNet/IP scanner Modbus TCP client/server Modbus TCP IO scanner Modbus TCP NVL Ethernet RSTP Modbus SL client/server Modbus SL IO scanner Modbus SL modem management Machine Expert ASCII manager ASCII modem management

Maximum Number Of Connected Devices	EtherNet/IP: 64 Modbus TCP: 64 Modbus TCP/EtherNet/IP: 96
Communication Service	MQTTs OPC UA server (Encrypt) HTTPs Methods (API) Web server Web visu TLS 1.2 TLS 1.3 SNTP NTP client/server FTP client/server FTPs server SQL client (remote access) DHCP client DHCP server DNS client POP3s client SMTP client SNMP client/server
Local Signalling	1 LED (green/red) for PWR 1 LED (green/red) for RUN 1 LED (green/red) for ERROR (fault) 1 LED (green/red) for stop forced 1 LED (green/red) for I/O error (I/O) 1 LED (green/orange) for SD card activity 1 LED (green/orange) for SL activity 1 LED (green/red) for ETH1 state 1 LED (green/red) for ETH2 state 1 LED (green/red) for EIP MS 1 LED (green/red) for EIP NS
Electrical Connection	removable spring terminal blockfor inputs and outputs removable spring terminal blockfor connecting the 24 V DC power supply
Maximum Cable Distance Between Devices	Shielded cable: <3 m for fast input Shielded cable: <3 m for fast output Unshielded cable: <50 m for input Unshielded cable: <50 m for output Shielded cable: <30 m for RS485 link Shielded cable: <15 m for RS232
Insulation	Between fast input and internal logic at 550 V AC Non-insulated between inputs Between fast output and internal logic at 500 V AC Non-insulated between outputs Between input and output at 500 V AC Between supply and internal logic at 500 V AC Non-insulated between supply and ground
Surge Withstand	1 kV power lines (DC) common mode conforming to IEC 61000-4-5 1 kV shielded cable common mode conforming to IEC 61000-4-5 0.5 kV relay output differential mode conforming to IEC 61000-4-5 1 kV input common mode conforming to IEC 61000-4-5 1 kV transistor output common mode conforming to IEC 61000-4-5
Mounting Support	Top hat type TH35-15 rail conforming to IEC 60715 Top hat type TH35-7.5 rail conforming to IEC 60715 plate or panel with fixing kit
Height	100 mm
Depth	90 mm
Width	125 mm
Net Weight	0.655 kg

Environment

Standards	UL 61010-1 UL 61010-2-201 CSA C22.2 No 61010-1 CSA C22.2 No 61010-2-201 CSA C22.2 No 213 ANSI/ISA 12-12-01 IEC 61131-2
Product Certifications	CE cULus cULus HazLoc Class I Division 2 CSA 22-2 No 213 RCM EAC Achilles KC
Resistance To Electrostatic Discharge	4 kV on contact conforming to IEC 61000-4-2 8 kV on air conforming to IEC 61000-4-2
Resistance To Electromagnetic Fields	10 V/m 80 MHz...1 GHz conforming to IEC 61000-4-3 3 V/m 1.4 GHz...2 GHz conforming to IEC 61000-4-3 1 V/m 2 GHz...3 GHz conforming to IEC 61000-4-3
Resistance To Fast Transients	2 kV (power lines) conforming to IEC 61000-4-4 1 kV (Ethernet line) conforming to IEC 61000-4-4 1 kV (serial link) conforming to IEC 61000-4-4 1 kV (input) conforming to IEC 61000-4-4 1 kV (transistor output) conforming to IEC 61000-4-4
Resistance To Conducted Disturbances	10 V 0.15...80 MHz conforming to IEC 61000-4-4 3 V 0.1...80 MHz 10 V spot frequency (2, 3, 4, 6.2, 8.2, 12.6, 16.5, 18.8, 22, 25 MHz)
Electromagnetic Emission	Conducted emissions - test level: 120...69 dBµV/m QP (power lines) at 10…150 kHz conforming to IEC 55011 Conducted emissions - test level: 63 dBµV/m QP (power lines) at 1.5…30 MHz conforming to IEC 55011 Radiated emissions - test level: 40 dBµV/m at 30…230 kHz conforming to IEC 55011 Conducted emissions - test level: 79...63 dBµV/m QP (power lines) at 150…1500 kHz conforming to IEC 55011 Radiated emissions at 230…1000 MHz conforming to IEC 55011
Immunity To Microbreaks	0.01 ms
Ambient Air Temperature For Operation	-20…60 °C (horizontal installation) -20…50 °C (vertical installation) -20…45 °C (flat mounting)
Ambient Air Temperature For Storage	-40…85 °C
Relative Humidity	10…95 %, without condensation (in operation) 10…95 %, without condensation (in storage)
Ip Degree Of Protection	IP20
Pollution Degree	2
Operating Altitude	0...2000 m
Storage Altitude	0…3000 m
Vibration Resistance	3.5 mm at 2…8.4 Hz on symmetrical rail 1 gn at 8.4…200 Hz on symmetrical rail 3.5 mm at 2…8.4 Hz on panel mounting 1 gn at 8.4…200 Hz on panel mounting
Shock Resistance	15 gn for 11 ms

Packing Units

Unit Type Of Package 1	PCE
Number Of Units In Package 1	1
Package 1 Height	13.8 cm
Package 1 Width	18.3 cm

Package 1 Length	13.1 cm
Package 1 Weight	835.0 g
Unit Type Of Package 2	S03
Number Of Units In Package 2	8
Package 2 Height	30 cm
Package 2 Width	30 cm
Package 2 Length	40 cm
Package 2 Weight	7.57 kg
Unit Type Of Package 3	P06
Number Of Units In Package 3	64
Package 3 Height	75.0 cm
Package 3 Width	40.0 cm
Package 3 Length	80.0 cm
Package 3 Weight	68 kg

Sustainability

Green Premium™ label is Schneider Electric's commitment to delivering products with best-in-class environmental performance. Green Premium promises compliance with the latest regulations, transparency on environmental impacts, as well as circular and low-CO_2 products.

Guide to assessing product sustainability is a white paper that clarifies global eco-label standards and how to interpret environmental declarations.

Learn more about Green Premium >

Guide to assess a product's sustainability >

Transparency RoHS/REACh

Well-being performance

Mercury Free	
Rohs Exemption Information	Yes
Pvc Free	

Certifications & Standards

Reach Regulation	REACh Declaration
Eu Rohs Directive	Pro-active compliance (Product out of EU RoHS legal scope)
China Rohs Regulation	China RoHS declaration
Environmental Disclosure	Product Environmental Profile
Weee	The product must be disposed on European Union markets following specific waste collection and never end up in rubbish bins
Circularity Profile	End of Life Information

Dimensions Drawings

Side and Front Views

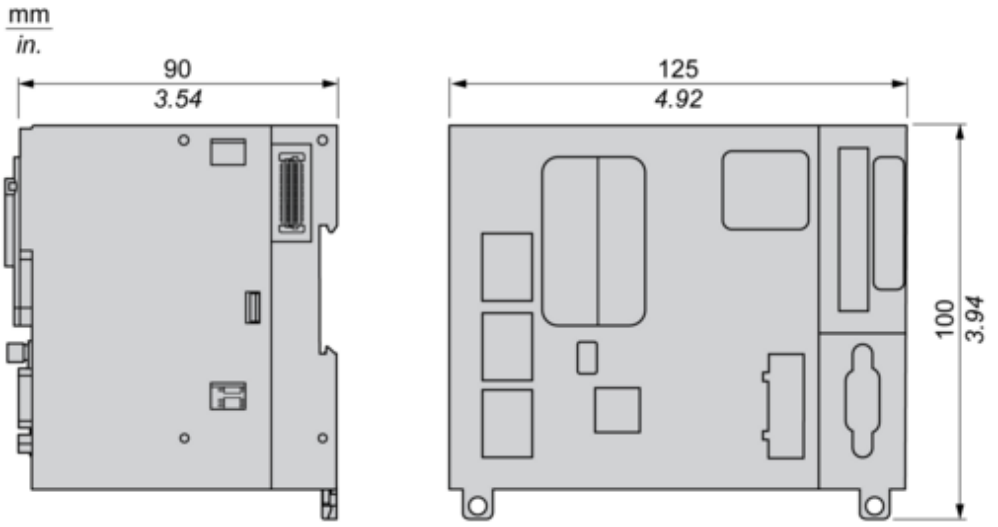

Mounting and Clearance

Correct Mounting Position

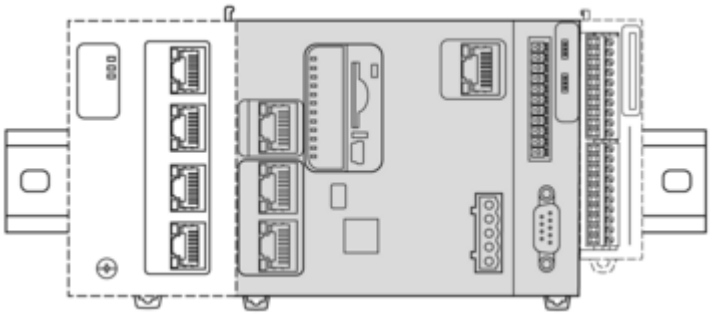

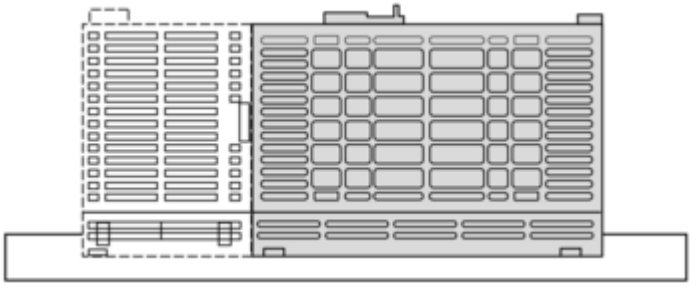

Acceptable Mounting Position

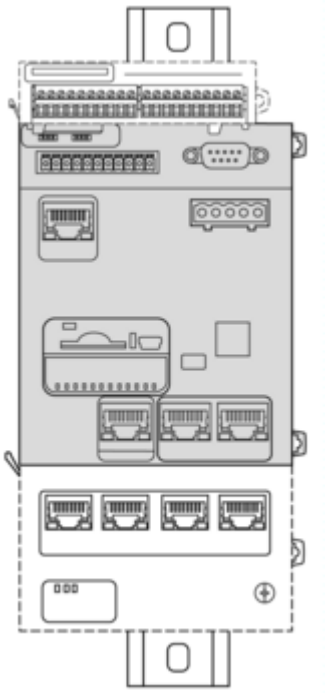

Incorrect Mounting Positions

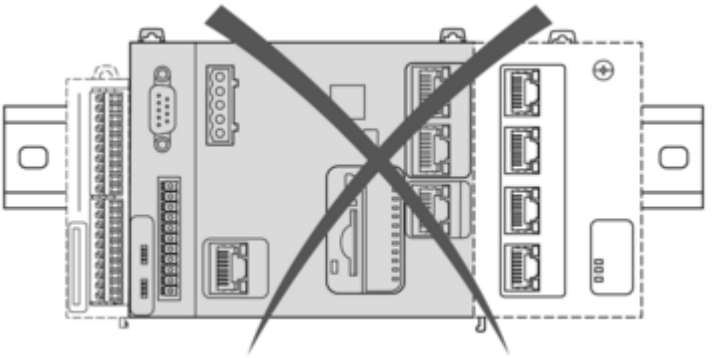

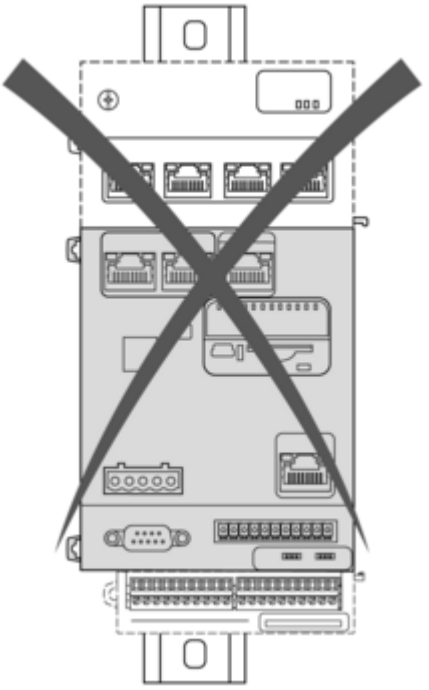

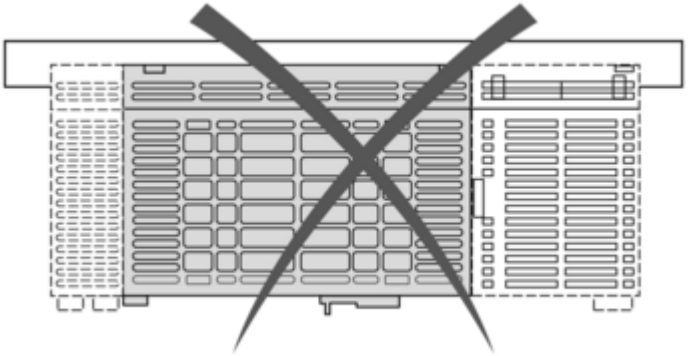

Minimum Clearances

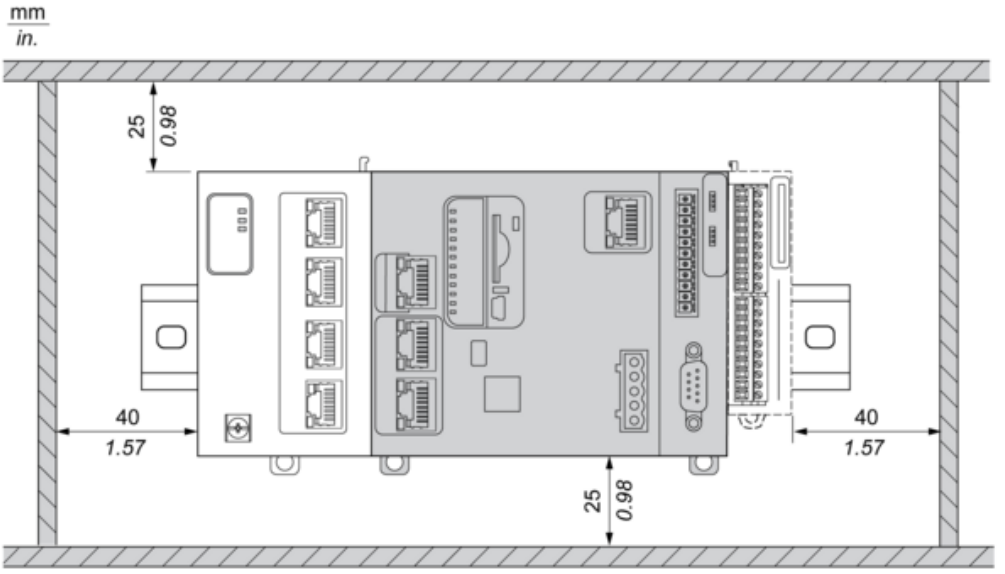

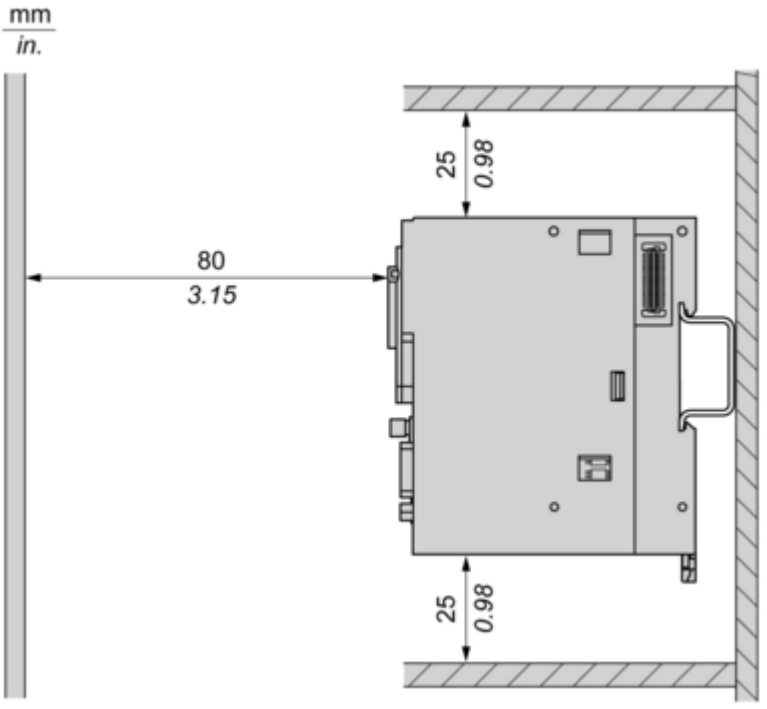

Connections and Schema

Encoder RS422 / 24 VDC

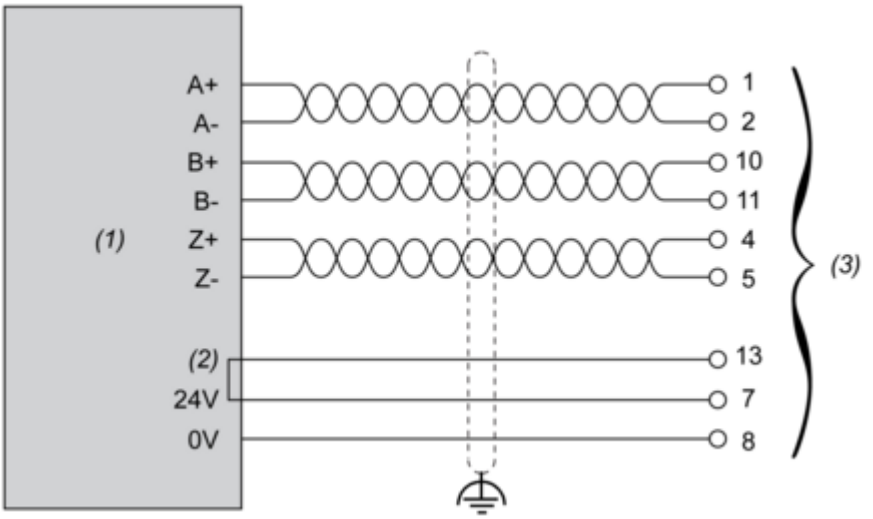

(1) Encoder
(2) Return Option
(3) Encoder Sub-D

Encoder RS422 / 5 VDC or Push Pull

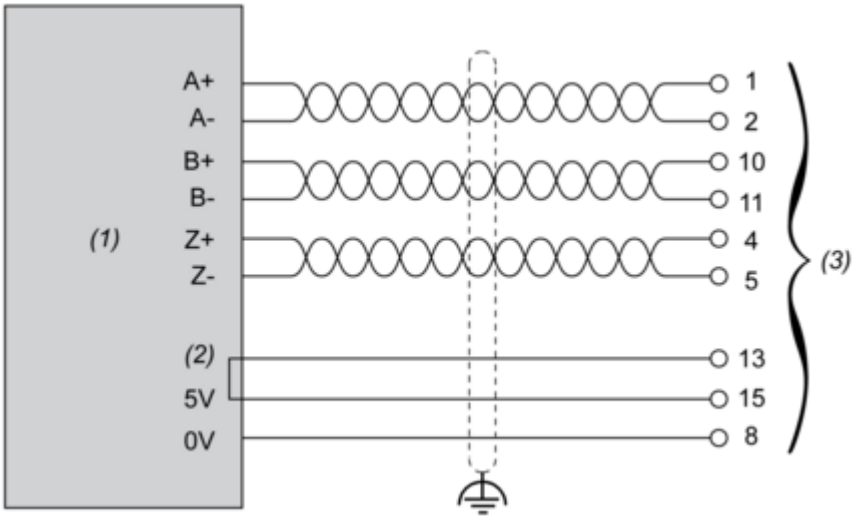

(1) Encoder
(2) Return Option
(3) Encoder Sub-D

Encoder SSI

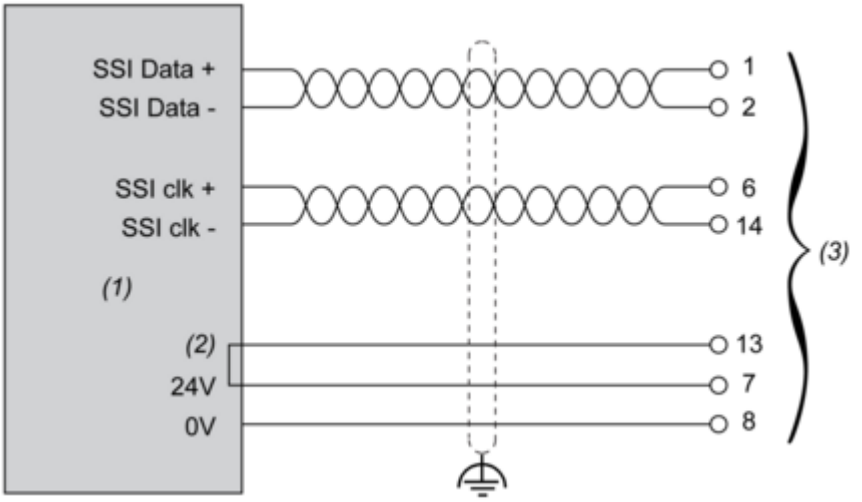

(1) Encoder
(2) Return Option
(3) Encoder Sub-D