# Product datasheet

Specifications

Green Premium™

## analog input module, Modicon TM3, 8 inputs, spring, 24V DC

TM3AI8G

## Main

| | |
|---|---|
| **Range Of Product** | Modicon TM3 |
| **Product Or Component Type** | Analog input module |
| **Range Compatibility** | Modicon M221<br>Modicon M241<br>Modicon M251<br>Modicon M262 |
| **Analogue Input Number** | 8 |
| **Analogue Input Type** | current 4...20 mA<br>current 0...20 mA<br>voltage 0...10 V<br>voltage - 10...10 V |

## Complementary

| | |
|---|---|
| **Analogue Input Resolution** | 12 bits<br>11 bits + sign |
| **Permissible Continuous Overload** | 13 V, analogue input type: voltage<br>40 mA, analogue input type: current |
| **Input Impedance** | <= 50 Ohm current<br>>= 1 MOhm voltage |
| **Lsb Value** | 2.44 mV 0...10 Vvoltage<br>4.88 mV - 10...10 Vvoltage<br>4.88 µA 0...20 mAcurrent<br>3.91 µA 4...20 mAcurrent |
| **Conversion Time** | 1 ms + 1 ms per channel + 1 controller cycle time |
| **Sampling Duration** | 1 ms |
| **Absolute Accuracy Error** | +/- 1 % of full scale<br>+/- 0.2 % of full scale at 25 °C |
| **Temperature Drift** | +/- 0.01 %FS/°C |
| **Repeat Accuracy** | +/-0.5 %FS |
| **Non-Linearity** | +/- 0.2 %FS |
| **Cross Talk** | <= 1 LSB |
| **[Us] Rated Supply Voltage** | 24 V DC |
| **Supply Voltage Limits** | 20.4…28.8 V |
| **Type Of Cable** | Twisted shielded pairs cable <30 m for input circuit |
| **Current Consumption** | 40 mA at 5 V DC via bus connector full load<br>35 mA at 5 V DC via bus connector no load<br>30 mA at 24 V DC via external supply no load<br>40 mA at 24 V DC via external supply full load |
| **Local Signalling** | 1 LED (green) for PWR |

Disclaimer: This documentation is not intended as a substitute for and is not to be used for determining suitability or reliability of these products for specific user applications

| | |
|---|---|
| **Electrical Connection** | 10 x 1.5 mm² removable spring terminal block with pitch 3.81 mm adjustment for inputs and supply<br>10 x 1.5 mm² removable spring terminal block with pitch 3.81 mm adjustment for inputs |
| **Insulation** | Between input and supply at 1500 V AC<br>Between input and internal logic at 500 V AC |
| **Marking** | CE |
| **Surge Withstand** | 1 kV power supply common mode conforming to IEC 61000-4-5<br>0.5 kV power supply differential mode conforming to IEC 61000-4-5<br>1 kV input common mode conforming to IEC 61000-4-5 |
| **Mounting Support** | Top hat type TH35-15 rail conforming to IEC 60715<br>Top hat type TH35-7.5 rail conforming to IEC 60715<br>plate or panel with fixing kit |
| **Height** | 90 mm |
| **Depth** | 70 mm |
| **Width** | 23.6 mm |
| **Net Weight** | 0.1 kg |

# Environment

| | |
|---|---|
| **Standards** | IEC 61131-2 |
| **Product Certifications** | CE<br>UKCA<br>RCM<br>EAC<br>cULus<br>cULus HazLoc |
| **Resistance To Electrostatic Discharge** | 8 kV in air conforming to IEC 61000-4-2<br>4 kV on contact conforming to IEC 61000-4-2 |
| **Resistance To Electromagnetic Fields** | 10 V/m 80 MHz...1 GHz conforming to IEC 61000-4-3<br>3 V/m 1.4 GHz...2 GHz conforming to IEC 61000-4-3<br>1 V/m 2 GHz...3 GHz conforming to IEC 61000-4-3 |
| **Resistance To Magnetic Fields** | 30 A/m conforming to IEC 61000-4-8 |
| **Resistance To Fast Transients** | 1 kV (I/O) conforming to IEC 61000-4-4 |
| **Resistance To Conducted Disturbances** | 10 V 0.15...80 MHz conforming to IEC 61000-4-6<br>3 V spot frequency (2, 3, 4, 6.2, 8.2, 12.6, 16.5, 18.8, 22, 25 MHz) conforming to Marine specification (LR, ABS, DNV, GL) |
| **Electromagnetic Emission** | Radiated emissions - test level: 40 dBµV/m QP class A ( 10 m) at 30…230 MHz conforming to IEC 55011<br>Radiated emissions - test level: 47 dBµV/m QP class A ( 10 m) at 230…1000 MHz conforming to IEC 55011 |
| **Immunity To Microbreaks** | 10 ms |
| **Ambient Air Temperature For Operation** | -10…55 °C horizontal installation<br>-10…35 °C vertical installation |
| **Ambient Air Temperature For Storage** | -25…70 °C |
| **Relative Humidity** | 10…95 %, without condensation (in operation)<br>10…95 %, without condensation (in storage) |
| **Ip Degree Of Protection** | IP20 |
| **Pollution Degree** | 2 |
| **Operating Altitude** | 0...2000 m |
| **Storage Altitude** | 0…3000 m |
| **Vibration Resistance** | 3.5 mm at 5…8.4 Hz on DIN rail<br>3 gn at 8.4…150 Hz on DIN rail |

| | |
|---|---|
| **Shock Resistance** | 15 gn for 11 ms |

## Packing Units

| | |
|---|---|
| **Unit Type Of Package 1** | PCE |
| **Number Of Units In Package 1** | 1 |
| **Package 1 Height** | 7.5 cm |
| **Package 1 Width** | 12.5 cm |
| **Package 1 Length** | 10.5 cm |
| **Package 1 Weight** | 195.0 g |
| **Unit Type Of Package 2** | S02 |
| **Number Of Units In Package 2** | 9 |
| **Package 2 Height** | 15 cm |
| **Package 2 Width** | 30 cm |
| **Package 2 Length** | 40 cm |
| **Package 2 Weight** | 2.292 kg |
| **Unit Type Of Package 3** | P12 |
| **Number Of Units In Package 3** | 288 |
| **Package 3 Height** | 75 cm |
| **Package 3 Width** | 80 cm |
| **Package 3 Length** | 120 cm |
| **Package 3 Weight** | 60 kg |

## Sustainability

**Green Premium™ label** is Schneider Electric's commitment to delivering products with best-in-class environmental performance. Green Premium promises compliance with the latest regulations, transparency on environmental impacts, as well as circular and low-$CO_2$ products.

**Guide to assessing product sustainability** is a white paper that clarifies global eco-label standards and how to interpret environmental declarations.

Learn more about Green Premium >

Guide to assess a product's sustainability >

Transparency RoHS/REACh

## Well-being performance

| | |
|---|---|
| Toxic Heavy Metal Free | |
| Mercury Free | |
| Rohs Exemption Information | Yes |
| Pvc Free | |

## Certifications & Standards

| | |
|---|---|
| **Reach Regulation** | REACh Declaration |
| **Eu Rohs Directive** | Pro-active compliance (Product out of EU RoHS legal scope)<br>EU RoHS Declaration |
| **China Rohs Regulation** | China RoHS declaration |
| **Environmental Disclosure** | Product Environmental Profile |
| **Weee** | The product must be disposed on European Union markets following specific waste collection and never end up in rubbish bins |
| **Circularity Profile** | End of Life Information |

## Dimensions Drawings

### Dimensions

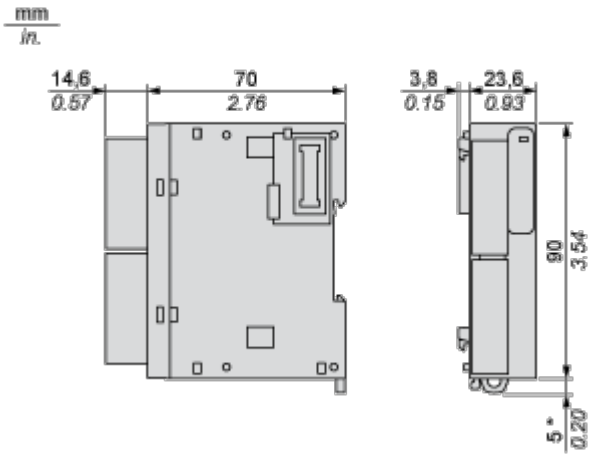


(*) 8.5 mm/0.33 in when the clamp is pulled out.

## Mounting and Clearance

### Spacing Requirements

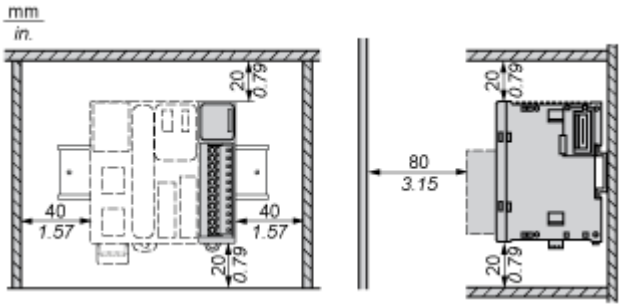

## Mounting on a Rail

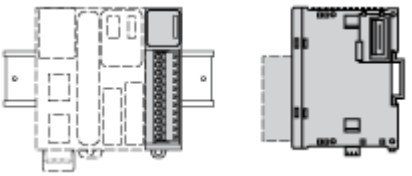

## Incorrect Mounting

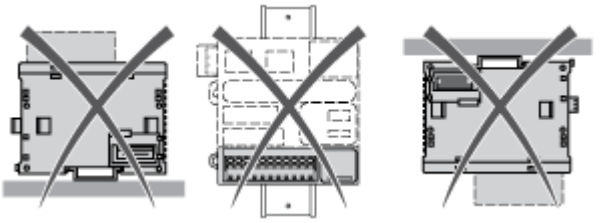

## Mounting on a Panel Surface

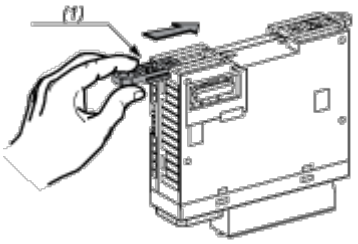


(1) Install a mounting strip

## Mounting Hole Layout

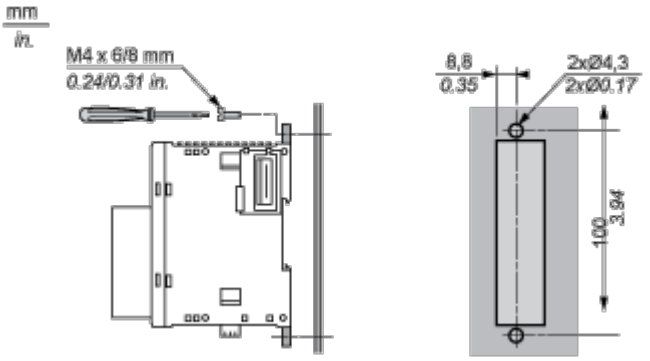

## Connections and Schema

### Analogue Input Module

#### Wiring Diagram (Current / Voltage)

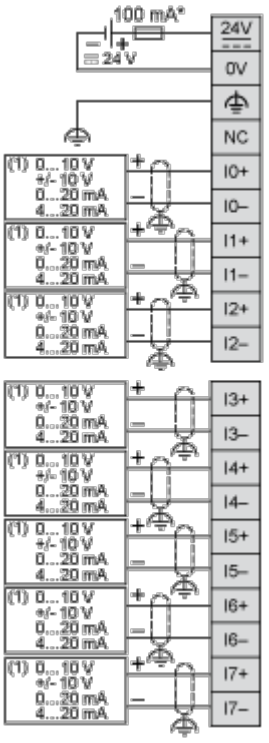


(*) Type T fuse

(1) Current/Voltage analog output device