Product datasheet

Specifications

analog output module, Modicon TM3, 2 outputs, spring, 24V DC

TM3AQ2G

Main

Range Of Product	Modicon TM3
Product Or Component Type	Analog output module
Range Compatibility	Modicon M221 Modicon M241 Modicon M251 Modicon M262
Analogue Output Number	2
Analogue Output Type	Current: 4...20 mA Current: 0...20 mA Voltage: 0...10 V Voltage: - 10...10 V

Complementary

Analogue Input Resolution	12 bits 11 bits + sign
Analogue Output Resolution	11 bits + sign 12 bits
Lsb Value	2.44 mV 0...10 Vvoltage 4.88 mV - 10...10 Vvoltage 4.88 µA 0...20 mAcurrent 3.91 µA 4...20 mAcurrent
Load Type	Resistive
Load Impedance Ohmic	1 kOhm voltage 300 Ohm current
Stabilisation Time	1 ms
Conversion Time	1 ms + 1 ms per channel + 1 controller cycle time
Absolute Accuracy Error	+/- 0.1 % of full scale at 25 °C +/- 1 % of full scale
Temperature Drift	+/- 0.006 %FS/°C
Repeat Accuracy	+/- 0.4 %FS
Non-Linearity	+/- 0.01 %FS
Output Ripple	20 mV
Cross Talk	<= 1 LSB
[Us] Rated Supply Voltage	24 V DC
Supply Voltage Limits	20.4…28.8 V
Type Of Cable	Twisted shielded pairs cable <30 m for output circuit

Disclaimer: This documentation is not intended as a substitute for and is not to be used for determining suitability or reliability of these products for specific user applications

Current Consumption	40 mA at 5 V DC via bus connector full load 35 mA at 5 V DC via bus connector no load 30 mA at 24 V DC via external supply no load 70 mA at 24 V DC via external supply full load
Local Signalling	1 LED (green) for PWR
Electrical Connection	11 x 2.5 mm² removable spring terminal block with pitch 5.08 mm adjustment for outputs and supply
Insulation	Between output and supply at 1500 V AC Between output and internal logic at 500 V AC
Marking	CE
Surge Withstand	1 kV power supply common mode conforming to IEC 61000-4-5 0.5 kV power supply differential mode conforming to IEC 61000-4-5 1 kV output common mode conforming to IEC 61000-4-5
Mounting Support	Top hat type TH35-15 rail conforming to IEC 60715 Top hat type TH35-7.5 rail conforming to IEC 60715 plate or panel with fixing kit
Height	90 mm
Depth	70 mm
Width	23.6 mm
Net Weight	0.1 kg

Environment

Standards	IEC 61131-2
Product Certifications	CE UKCA RCM EAC cULus cULus HazLoc
Resistance To Electrostatic Discharge	8 kV in air conforming to IEC 61000-4-2 4 kV on contact conforming to IEC 61000-4-2
Resistance To Electromagnetic Fields	10 V/m 80 MHz...1 GHz conforming to IEC 61000-4-3 3 V/m 1.4 GHz...2 GHz conforming to IEC 61000-4-3 1 V/m 2 GHz...3 GHz conforming to IEC 61000-4-3
Resistance To Magnetic Fields	30 A/m conforming to IEC 61000-4-8
Resistance To Fast Transients	1 kV (I/O) conforming to IEC 61000-4-4
Resistance To Conducted Disturbances	10 V 0.15...80 MHz conforming to IEC 61000-4-6 3 V spot frequency (2, 3, 4, 6.2, 8.2, 12.6, 16.5, 18.8, 22, 25 MHz) conforming to Marine specification (LR, ABS, DNV, GL)
Electromagnetic Emission	Radiated emissions - test level: 40 dBµV/m QP class A (10 m) at 30…230 MHz conforming to IEC 55011 Radiated emissions - test level: 47 dBµV/m QP class A (10 m) at 230…1000 MHz conforming to IEC 55011
Immunity To Microbreaks	10 ms
Ambient Air Temperature For Operation	-10…55 °C horizontal installation -10…35 °C vertical installation
Ambient Air Temperature For Storage	-25…70 °C
Relative Humidity	10…95 %, without condensation (in operation) 10…95 %, without condensation (in storage)
Ip Degree Of Protection	IP20
Pollution Degree	2
Operating Altitude	0...2000 m

Storage Altitude	0…3000 m
Vibration Resistance	3.5 mm at 5…8.4 Hz on DIN rail 3 gn at 8.4…150 Hz on DIN rail
Shock Resistance	15 gn for 11 ms

Packing Units

Unit Type Of Package 1	PCE
Number Of Units In Package 1	1
Package 1 Height	7.5 cm
Package 1 Width	12.5 cm
Package 1 Length	10.5 cm
Package 1 Weight	200.0 g
Unit Type Of Package 2	S02
Number Of Units In Package 2	9
Package 2 Height	15 cm
Package 2 Width	30 cm
Package 2 Length	40 cm
Package 2 Weight	2.255 kg
Unit Type Of Package 3	P12
Number Of Units In Package 3	288
Package 3 Height	75 cm
Package 3 Width	120 cm
Package 3 Length	80 cm
Package 3 Weight	82 kg

Sustainability

Green Premium™ label is Schneider Electric's commitment to delivering products with best-in-class environmental performance. Green Premium promises compliance with the latest regulations, transparency on environmental impacts, as well as circular and low-CO_2 products.

Guide to assessing product sustainability is a white paper that clarifies global eco-label standards and how to interpret environmental declarations.

Learn more about Green Premium >

Guide to assess a product's sustainability >

Transparency RoHS/REACh

Well-being performance

Toxic Heavy Metal Free	
Mercury Free	
Rohs Exemption Information	Yes
Pvc Free	

Certifications & Standards

Reach Regulation	REACh Declaration
Eu Rohs Directive	Pro-active compliance (Product out of EU RoHS legal scope) EU RoHS Declaration
China Rohs Regulation	China RoHS declaration
Environmental Disclosure	Product Environmental Profile
Weee	The product must be disposed on European Union markets following specific waste collection and never end up in rubbish bins
Circularity Profile	End of Life Information

Dimensions Drawings

Dimensions

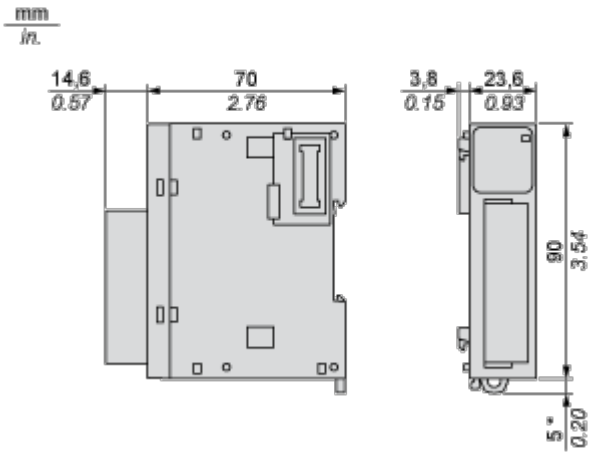

(*) 8.5 mm/0.33 in when the clamp is pulled out.

Mounting and Clearance

Spacing Requirements

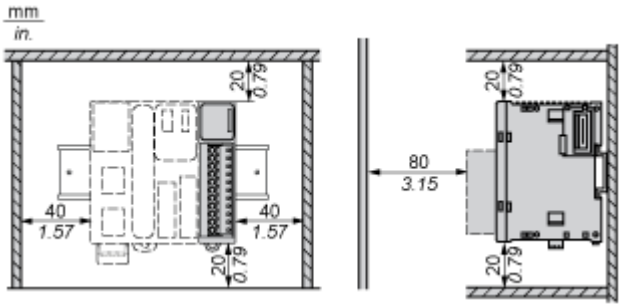

Mounting on a Rail

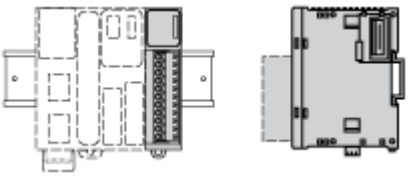

Incorrect Mounting

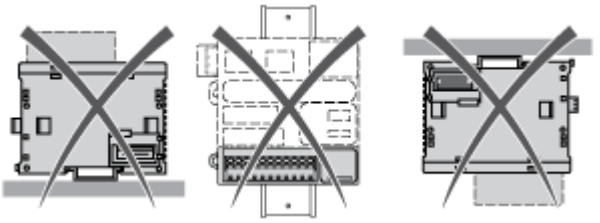

Mounting on a Panel Surface

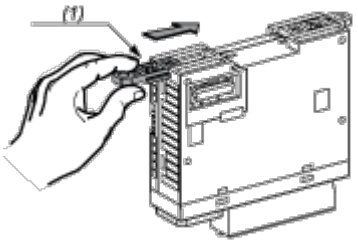

(1) Install a mounting strip

Mounting Hole Layout

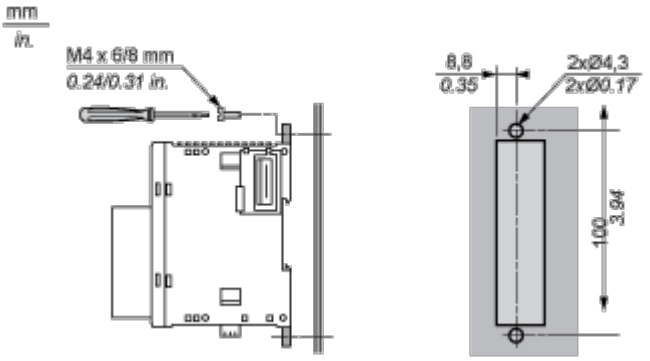

Connections and Schema

Analogue Output Module

Wiring Diagram (Current / Voltage)

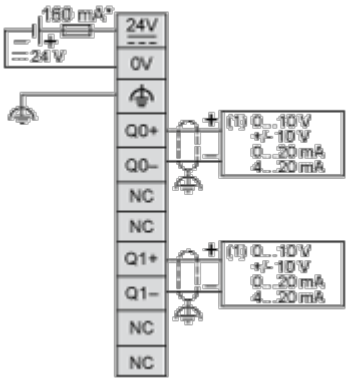

(*) Type T fuse

(1) Voltage/current pre-actuator