Product datasheet

Specifications

Green Premium™

graphic display, Modicon M221, unit, 240 x 160pixels

TMH2GDB

Main

Range Of Product	Modicon M221
Product Or Component Type	Graphic display
Range Compatibility	Modicon M221
Current Consumption	40 mA at 5 V DC via RJ45 connector
Maximum Power Consumption In W	1 W
Display Type	Backlit colour STN LCD
Display Colour	Monochrome
Display Resolution	240 x 160 pixels
Number Of Key	4 configurable 6 for navigation

Complementary

Standards	IEC 61131-2 IEC 61010-2-201
Product Certifications	cULus
Marking	CE
Mounting Location	Front cabinet diameter: 22 mm hole Bottom of cabinet diameter: 22 mm hole, connection via mounting accessory
Connector Type	RJ45 for communication and power supply
Height	126 mm
Width	80 mm
Depth	63 mm
Net Weight	0.17 kg

Environment

Ambient Air Temperature For Operation	-15…50 °C
Operating Altitude	0...2000 m
Storage Altitude	0…2000 m
Environmental Characteristic	Corrosive gas free
Relative Humidity	95 %, non-condensing (transport) 95 %, non-condensing (storage) 95 %, non-condensing (operation)
Ambient Air Temperature For Storage	-40…70 °C

Disclaimer: This documentation is not intended as a substitute for and is not to be used for determining suitability or reliability of these products for specific user applications

Ip Degree Of Protection	IP65 front face: IP20 back part:
Pollution Degree	2 conforming to IEC 60664-1
Vibration Resistance	1.5 mm (f= 3…150 Hz) 2 gn
Shock Resistance	15 gn for 11 ms
Electromagnetic Compatibility	Electrostatic discharge - test level: 8 kV (air discharge) conforming to IEC 61000-4-2 Electrostatic discharge - test level: 4 kV (contact discharge) conforming to IEC 61000-4-2 Radiated radio-frequency electromagnetic field immunity test - test level: 10 V/m (80 MHz...1 GHz) conforming to IEC 61000-4-3 Radiated radio-frequency electromagnetic field immunity test - test level: 3 V/m (1.4...2 GHz) conforming to IEC 61000-4-3 Radiated radio-frequency electromagnetic field immunity test - test level: 1 V/m (2...3 GHz) conforming to IEC 61000-4-3 Magnetic field at power frequency - test level: 30 A/m (50/60 Hz) conforming to IEC 61000-4-8 Electrical fast transient/burst immunity test - test level: 1 kV conforming to IEC 61000-4-4 Surge immunity test - test level: 0.5 kV (common mode) conforming to IEC 61000-4-5 Surge immunity test - test level: 0.5 kV (differential mode) conforming to IEC 61000-4-5 Conducted RF disturbances - test level: 10 Vrms (0.15...80 MHz) conforming to IEC 61000-4-6 Disturbing field emission - test level: 10...150 kHz (power lines (DC)) conforming to IEC 55011 Disturbing field emission - test level: 120...69 dBµV/m QP (power lines (DC)) conforming to IEC 55011 Disturbing field emission - test level: 150...1500 kHz (power lines (DC)) conforming to IEC 55011 Disturbing field emission - test level: 1.5...30 kHz (power lines (DC)) conforming to IEC 55011 Disturbing field emission - test level: 30...230 MHz class A (10 m) conforming to IEC 55011 Disturbing field emission - test level: 230 MHz...1 GHZ class A (10 m) conforming to IEC 55011 Disturbing field emission - test level: 79...63 dBµV/m QP (power lines (DC)) conforming to IEC 55011 Disturbing field emission - test level: 63 dBµV/m QP (power lines (DC)) conforming to IEC 55011 Disturbing field emission - test level: 40 dBµV/m QP class A (10 m) conforming to IEC 55011 Disturbing field emission - test level: 47 dBµV/m QP class A (10 m) conforming to IEC 55011

Packing Units

Unit Type Of Package 1	PCE
Number Of Units In Package 1	1
Package 1 Height	6.3 cm
Package 1 Width	8.0 cm
Package 1 Length	12.6 cm
Package 1 Weight	164.0 g
Unit Type Of Package 2	S03
Number Of Units In Package 2	12
Package 2 Height	30.0 cm
Package 2 Width	30.0 cm
Package 2 Length	40.0 cm
Package 2 Weight	4.375 kg
Unit Type Of Package 3	P06
Number Of Units In Package 3	96

Package 3 Height	70.0 cm
Package 3 Width	60.0 cm
Package 3 Length	80.0 cm
Package 3 Weight	15.744 kg

Sustainability

Green Premium™ label is Schneider Electric's commitment to delivering products with best-in-class environmental performance. Green Premium promises compliance with the latest regulations, transparency on environmental impacts, as well as circular and low-CO_2 products.

Guide to assessing product sustainability is a white paper that clarifies global eco-label standards and how to interpret environmental declarations.

Learn more about Green Premium >

Guide to assess a product's sustainability >

Transparency RoHS/REACh

Well-being performance

Mercury Free	
Rohs Exemption Information	Yes
Pvc Free	

Certifications & Standards

Reach Regulation	REACh Declaration
Eu Rohs Directive	Pro-active compliance (Product out of EU RoHS legal scope)
China Rohs Regulation	China RoHS declaration
Environmental Disclosure	Product Environmental Profile
Circularity Profile	End of Life Information

Presentation

Remote Graphic Display

Overview

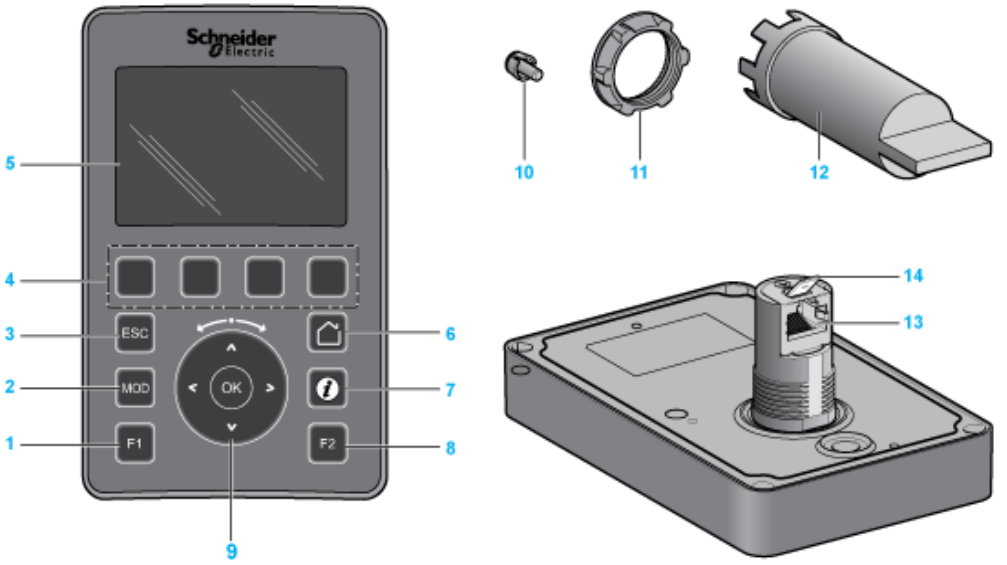

1 : F1 key

2 : MOD key

3 : ESC key

4 : R1 to R4 keys

5 : Graphic screen

6 : Home key

7 : Information key

8 : F2 key

9 : Touch wheel/OK/Arrows

10 : Anti-rotation tee

11 : Installation nut

12 : Socket wrench (ZB5AZ905)

13 : RJ45 serial line (RS-485)

14 : Connector for functional ground (earth)

Dimensions Drawings

Remote Graphic Display

Dimensions

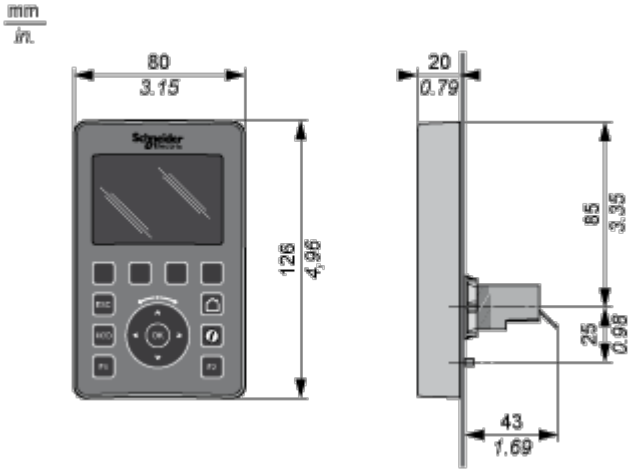

Mounting and Clearance

Mounting and Clearances

Mounting Hole Layout

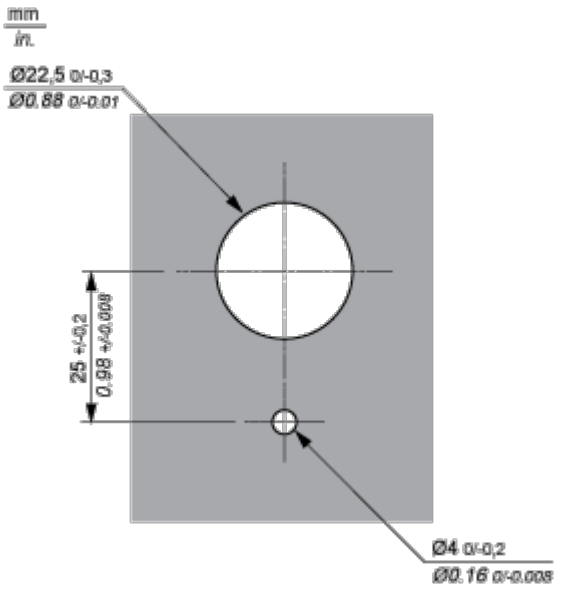
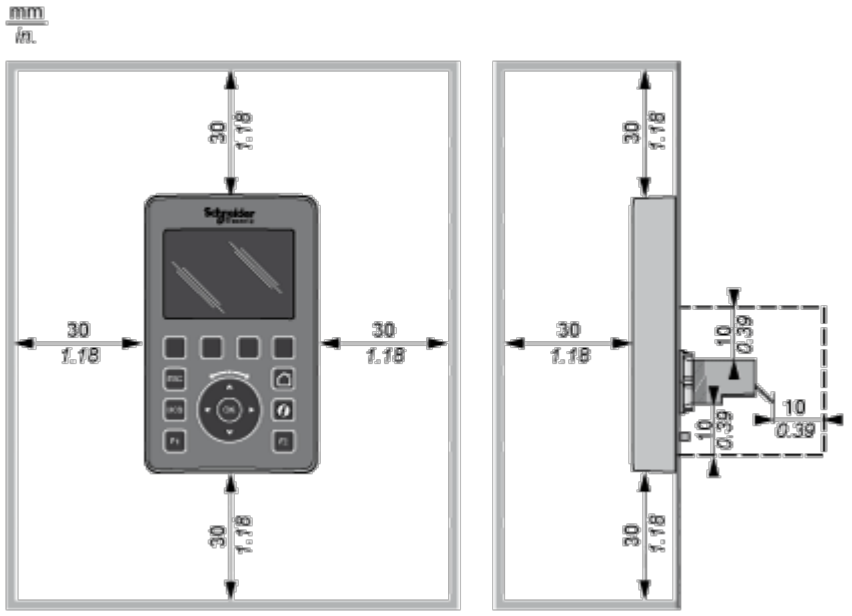
Minimum Clearances