Product datasheet

Specifications

Green Premium™

smart communication module, Modicon M262, Ethernet, 4 RJ45

TMSES4

Main

Range Of Product	Modicon M262
Product Or Component Type	Smart communication module

Complementary

Range Compatibility	Modicon M262
Current Consumption	200 mA at 24 V
Number Of Module Per Plc	1 maximum per logic controller 1 maximum per motion controller
Port Ethernet	10/100/1000 BASE-TX - 4 port(s) RJ45
Services	Self speed adaptation (10-100-1000 Mbits) Half or full duplex Autocrossing (MDIO)
Web Services	Web server
Communication Service	Ethernet/IP adapter DHCP client IEC VAR ACCESS Modbus TCP server SNMP client/server FTP client/server SQL client Send and receive email from the controller based on TCP/UDP library Web server OPC UA server DNS client MQTT SNTP TLS
Communication Port Protocol	Ethernet
Local Signalling	1 LED (green) for PWR 1 LED for MOD STS 1 LED for ETH
Mounting Support	Top hat type TH35-15 rail conforming to IEC 60715 Top hat type TH35-7.5 rail conforming to IEC 60715 plate or panel with fixing kit
Width	60 mm
Height	100 mm
Depth	88.3 mm

Environment

Disclaimer: This documentation is not intended as a substitute for and is not to be used for determining suitability or reliability of these products for specific user applications

Standards	UL 61010-1 UL 61010-2-201 CSA C22.2 No 61010-1 CSA C22.2 No 61010-2-201 CSA C22.2 No 213 ANSI/ISA 12-12-01 IEC 61131-2 -
Product Certifications	CE cULus RCM EAC (pending) Achilles
Resistance To Electrostatic Discharge	4 kV on contact conforming to IEC 61000-4-2 8 kV on air conforming to IEC 61000-4-2
Resistance To Electromagnetic Fields	10 V/m 80 MHz...1 GHz conforming to IEC 61000-4-3 3 V/m 1.4 GHz...2 GHz conforming to IEC 61000-4-3 1 V/m 2 GHz...3 GHz conforming to IEC 61000-4-3
Resistance To Fast Transients	2 kV (power lines) conforming to IEC 61000-4-4 1 kV (Ethernet line) conforming to IEC 61000-4-4 1 kV (serial link) conforming to IEC 61000-4-4 1 kV (input) conforming to IEC 61000-4-4 1 kV (transistor output) conforming to IEC 61000-4-4
Resistance To Conducted Disturbances	10 V 0.15...80 MHz conforming to IEC 61000-4-4 3 V 0.1...80 MHz conforming to Marine specification (LR, ABS, DNV, GL) 10 V spot frequency (2, 3, 4, 6.2, 8.2, 12.6, 16.5, 18.8, 22, 25 MHz) conforming to Marine specification (LR, ABS, DNV, GL)
Electromagnetic Emission	Conducted emissions - test level: 120...69 dBµV/m QP (power lines) at 10…150 kHz conforming to IEC 55011 Conducted emissions - test level: 63 dBµV/m QP (power lines) at 1.5…30 MHz conforming to IEC 55011 Radiated emissions - test level: 40 dBµV/m A at 30…230 kHz conforming to IEC 55011 Conducted emissions - test level: 79...63 dBµV/m QP (power lines) at 150…1500 kHz conforming to IEC 55011 Radiated emissions - test level: 47 dBµV/m A at 230…1000 MHz conforming to IEC 55011
Ambient Air Temperature For Operation	-20…60 °C horizontal installation -20…50 °C vertical installation
Ambient Air Temperature For Storage	-40…85 °C
Relative Humidity	10…95 %, without condensation (in operation) 10…95 %, without condensation (in storage)
Ip Degree Of Protection	IP20
Pollution Degree	2
Operating Altitude	0...2000 m
Storage Altitude	0…3000 m
Vibration Resistance	3.5 mm at 2…8.4 Hz on symmetrical rail 1 gn at 8.4…200 Hz on symmetrical rail 3.5 mm at 2…8.4 Hz on panel mounting 1 gn at 8.4…200 Hz on panel mounting
Shock Resistance	15 gn for 11 ms

Packing Units

Unit Type Of Package 1	PCE
Number Of Units In Package 1	1
Package 1 Height	10.4 cm
Package 1 Width	11.8 cm
Package 1 Length	16.9 cm

Package 1 Weight	522.0 g
Unit Type Of Package 2	S03
Number Of Units In Package 2	10
Package 2 Height	30.0 cm
Package 2 Width	30.0 cm
Package 2 Length	40.0 cm
Package 2 Weight	5.9 kg

Sustainability

Green Premium™ label is Schneider Electric's commitment to delivering products with best-in-class environmental performance. Green Premium promises compliance with the latest regulations, transparency on environmental impacts, as well as circular and low-CO_2 products.

Guide to assessing product sustainability is a white paper that clarifies global eco-label standards and how to interpret environmental declarations.

Learn more about Green Premium >

Guide to assess a product's sustainability >

Transparency RoHS/REACh

Well-being performance

Mercury Free	
Rohs Exemption Information	Yes
Pvc Free	

Certifications & Standards

Reach Regulation	REACh Declaration
Eu Rohs Directive	Pro-active compliance (Product out of EU RoHS legal scope)
China Rohs Regulation	China RoHS declaration
Environmental Disclosure	Product Environmental Profile
Weee	The product must be disposed on European Union markets following specific waste collection and never end up in rubbish bins
Circularity Profile	End of Life Information

Dimensions Drawings
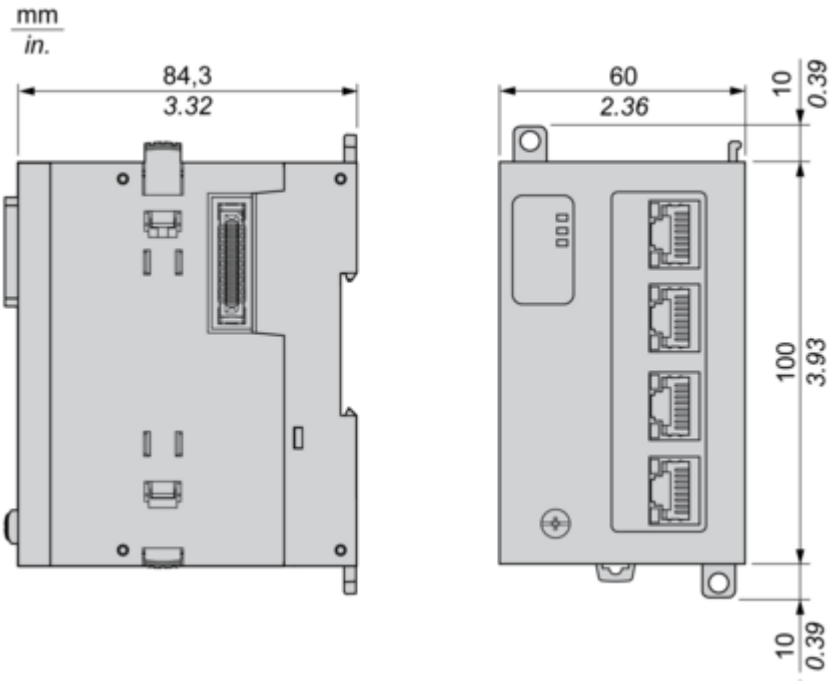
Side and Front Views