Product datasheet

Specifications

Empty control station, Harmony XALD, XALK, plastic, dark grey lid, light grey base, 3 cut out, UL CSA certified

XALD03H7

Main

Range Of Product	Harmony XALD
Product Or Component Type	Empty control station
Device Short Name	XALD
Product Destination	For XB5 Ø 22 mm control and signalling units
Number Of Cut-Out	3 cut-outs
Colour Of Base Of Enclosure	Light grey (RAL 7035)
Colour Of Cover	Dark grey (RAL 7016)
Material	Polycarbonate
Cable Entry	2 knock-outs for cable entry, clamping capacity: 14 mm 2 knock-outs for Pg 13 cable gland and ISO M20, clamping capacity: 12 mm
Ip Degree Of Protection	IP66 conforming to IEC 60529 IP67 IP69 IP69K

Complementary

Assembly Style	For customer assembly
Number Of Horizontal Rows	1
Number Of Vertical Rows	3
Net Weight	0.238 kg
Resistance To High Pressure Washer	7000000 Pa at 55 °C, distance : 0.1 m
Mounting Of Block	Rear mounting Front mounting
Electrical Composition Code	PF2 MR1 SF1 MF2 SF2 SR2 SR1 PR1 PF1 MF1
Main Group	3 cut-outs
Group Of Product	UL-CSA grey

Environment

Protective Treatment	TH

Disclaimer: This documentation is not intended as a substitute for and is not to be used for determining suitability or reliability of these products for specific user applications

Ambient Air Temperature For Storage	-40…70 °C
Ambient Air Temperature For Operation	-40…70 °C
Overvoltage Category	Class II conforming to IEC 60536
Nema Degree Of Protection	NEMA 13 NEMA 4X
Ik Degree Of Protection	IK03 conforming to IEC 62262
Standards	IEC 60947-5-4 CSA C22.2 No 14 IEC 60947-5-1 JIS C8201-5-1 IEC 60947-1 IEC 60947-5-5 UL 508 JIS C8201-1
Product Certifications	UL CSA

Packing Units

Unit Type Of Package 1	PCE
Number Of Units In Package 1	1
Package 1 Height	7.000 cm
Package 1 Width	7.800 cm
Package 1 Length	14.000 cm
Package 1 Weight	234.000 g
Unit Type Of Package 2	S03
Number Of Units In Package 2	30
Package 2 Height	30 cm
Package 2 Width	30 cm
Package 2 Length	40 cm
Package 2 Weight	7.443 kg
Unit Type Of Package 3	P06
Number Of Units In Package 3	240
Package 3 Height	77.000 cm
Package 3 Width	60.000 cm
Package 3 Length	80.000 cm
Package 3 Weight	67.445 kg

Contractual warranty

Warranty	18 months

Sustainability

Green Premium™ label is Schneider Electric's commitment to delivering products with best-in-class environmental performance. Green Premium promises compliance with the latest regulations, transparency on environmental impacts, as well as circular and low-CO_2 products.

Guide to assessing product sustainability is a white paper that clarifies global eco-label standards and how to interpret environmental declarations.

Learn more about Green Premium >

Guide to assess a product's sustainability >

Transparency RoHS/REACh

Well-being performance

Reach Free Of Svhc	
Toxic Heavy Metal Free	
Mercury Free	
Rohs Exemption Information	Yes

Certifications & Standards

Reach Regulation	REACh Declaration
Eu Rohs Directive	Pro-active compliance (Product out of EU RoHS legal scope) EU RoHS Declaration
China Rohs Regulation	China RoHS declaration
Environmental Disclosure	Product Environmental Profile
Circularity Profile	End of Life Information

Dimensions Drawings

Dimensions

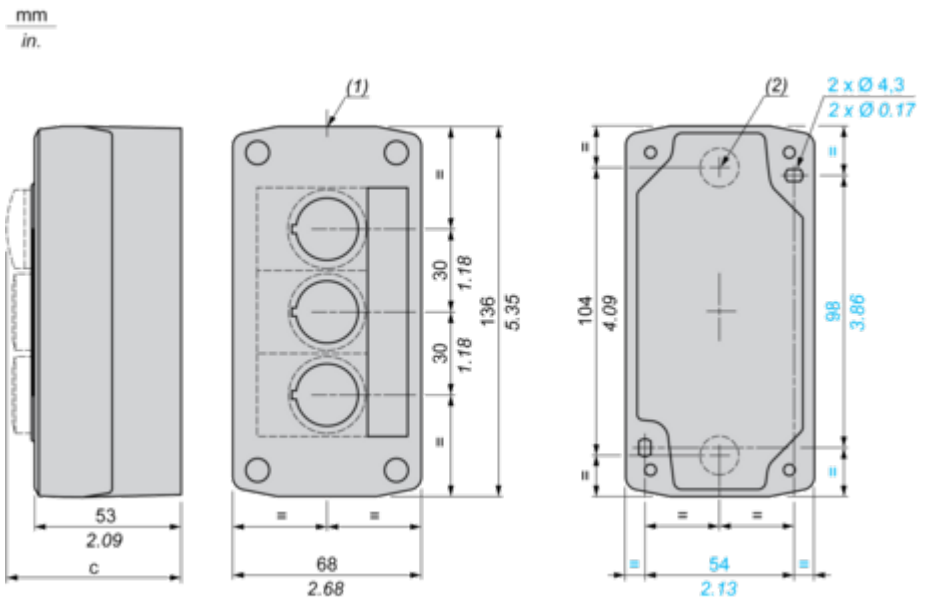

(1) 2 knock-outs for Pg 13.5 cable gland, maximum capacity 12 mm/0.47 in.
(2) Knock-out for cable entry, maximum capacity 14 mm/0.55 in.

Control station fitted with:	c in mm	c in in.
Flush pushbutton	62	2.44
Illuminated pushbutton	64	2.52
Pilot light	65.5	2.58
Projecting pushbutton	66	2.60
Selector switch	80	3.15
Key switch	105.5	4.15