Product datasheet

Specifications

Green Premium™

Single foot switch, Harmony XPE, plastic, blue, without cover, 1 step, 1 contact 1NC+NO, IP66

XPEB110

Main

Range Of Product	Harmony XPE
Product Or Component Type	Foot switch
Material	Plastic
Foot Switch Type	Single foot switch
Device Short Name	XPEB
Trigger Mechanism	Without trigger mechanism
Contact Operation	1 step
Contacts Type And Composition	1 NC + 1 NO
Colour	Blue

Complementary

Positive Opening	With conforming to IEC 60947-5-1 appendix K
Connections - Terminals	Screw clamp terminal, <= 1 x 2.5 mm² with or without cable end Screw clamp terminal, <= 2 x 1.5 mm² with or without cable end
Cable Entry	2 plain holes for M20 cable gland
Mechanical Durability	10000000 cycles
[Ie] Rated Operational Current	3 A, 240 V, AC-15, A300 0.27 A, 250 V, DC-13, Q300 conforming to IEC 60947-5-1 appendix A
[Ui] Rated Insulation Voltage	500 V (pollution degree 3) conforming to IEC 60947-1 500 V (pollution degree 3) conforming to NF C 20-040 group C 500 V (pollution degree 3) conforming to VDE 0110 group C 300 V conforming to UL 508 300 V conforming to CSA C22.2 No 14
[Uimp] Rated Impulse Withstand Voltage	6 kV conforming to IEC 60947-1
Maximum Resistance Across Terminals	25 MOhm conforming to IEC 60255-7 category 3 25 MOhm conforming to NF C 93-050 method A
Short-Circuit Protection	10 A cartridge fuse type gG conforming to IEC 60947-5-1 10 A cartridge fuse type gG conforming to VDE 0660-200
Rated Operational Power In W	10 W DC-13, operating rate <60 cyc/mn, 5000000 cycles, 24 V, load factor: 0.5 conforming to IEC 60947-5-1 appendix C 4 W DC-13, operating rate <60 cyc/mn, 5000000 cycles, 120 V, load factor: 0.5 conforming to IEC 60947-5-1 appendix C 7 W DC-13, operating rate <60 cyc/mn, 5000000 cycles, 48 V, load factor: 0.5 conforming to IEC 60947-5-1 appendix C
Net Weight	0.57 kg

Environment

Disclaimer: This documentation is not intended as a substitute for and is not to be used for determining suitability or reliability of these products for specific user applications

Standards	CSA C22.2 No 14 IEC 60947-5-1 UL 508
Product Certifications	CSA UL
Protective Treatment	TH
Ambient Air Temperature For Operation	-25…70 °C
Ambient Air Temperature For Storage	-40…70 °C
Vibration Resistance	5 gn (f= 10…500 Hz) conforming to IEC 60068-2-6
Shock Resistance	30 gn conforming to IEC 60068-2-27
Overvoltage Category	Class II conforming to IEC 61140 Class II conforming to NF C 20-030
Ip Degree Of Protection	IP66 conforming to IEC 60529

Packing Units

Unit Type Of Package 1	PCE
Number Of Units In Package 1	1
Package 1 Height	8.600 cm
Package 1 Width	17.200 cm
Package 1 Length	28.400 cm
Package 1 Weight	817.000 g
Unit Type Of Package 2	S04
Number Of Units In Package 2	12
Package 2 Height	30.000 cm
Package 2 Width	40.000 cm
Package 2 Length	60.000 cm
Package 2 Weight	10.575 kg
Unit Type Of Package 3	P06
Number Of Units In Package 3	48
Package 3 Height	75.000 cm
Package 3 Width	60.000 cm
Package 3 Length	80.000 cm
Package 3 Weight	52.004 kg

Contractual warranty

Warranty	18 months

Sustainability

Green Premium™ label is Schneider Electric's commitment to delivering products with best-in-class environmental performance. Green Premium promises compliance with the latest regulations, transparency on environmental impacts, as well as circular and low-CO_2 products.

Guide to assessing product sustainability is a white paper that clarifies global eco-label standards and how to interpret environmental declarations.

Learn more about Green Premium >

Guide to assess a product's sustainability >

Transparency RoHS/REACh

Well-being performance

Mercury Free

Rohs Exemption Information	Yes

Certifications & Standards

Reach Regulation	REACh Declaration
Eu Rohs Directive	Pro-active compliance (Product out of EU RoHS legal scope)
China Rohs Regulation	China RoHS declaration
Environmental Disclosure	Product Environmental Profile
Weee	The product must be disposed on European Union markets following specific waste collection and never end up in rubbish bins
Circularity Profile	No need of specific recycling operations Circularity Profile

Dimensions Drawings

Plastic Foot Switch without Protective Cover

Dimensions

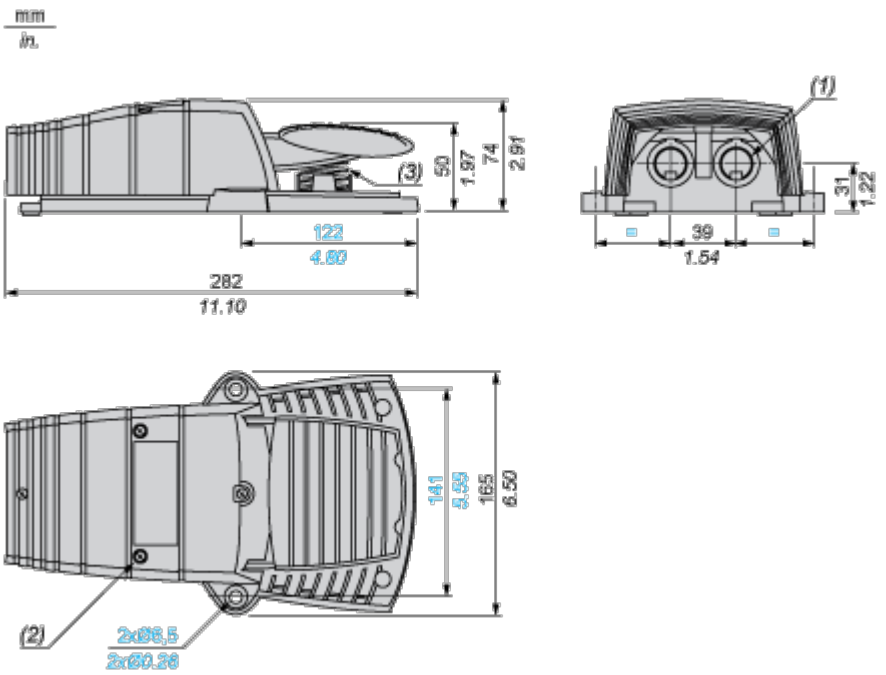

(1) 2 plain holes for ISO M20 or n° 13 (Pg 13.5) cable gland.

(2) 4 cover fixing screws: stainless steel. Tightening torque: 1 N.m.

(3) Return spring: stainless steel.

Performance Curves

Electrical Durability of Contacts

AC-15 Utilization Category

Operating rate: 3600 operating cycles/hour. Load factor: 0.5.
Inductive circuit:

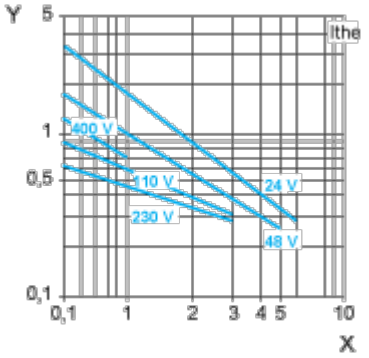

X Current in A

Y Millions of operating cycles

DC-13 Utilization Category

Refer to the product characteristic “Operational power in W”.