Product datasheet

Specifications

Green Premium™

module XPSBCE - two-hand control - 230 V AC

XPSBCE3710P

Discontinued on: 16 Jan 2024

Discontinued

Main

Range Of Product	Preventa Safety automation
Product Or Component Type	Preventa safety module
Safety Module Name	XPSBCE
Safety Module Application	For electrical monitoring of two-hand control stations
Function Of Module	Monitoring two-hand control station
Safety Level	Can reach PL e/category 4 conforming to EN/ISO 13849-1 Can reach SILCL 3 conforming to EN/IEC 62061
Safety Reliability Data	DC > 99 % conforming to EN/ISO 13849-1 MTTFd = 37 years conforming to EN/ISO 13849-1 PFHd = 3E-8 1/h conforming to EN/IEC 62061
Connections - Terminals	Captive screw clamp terminals, removable terminal block, 1 x 0.25...1 x 1.5 mm² flexible with cable end, with bezel Captive screw clamp terminals, removable terminal block, 1 x 0.25...1 x 2.5 mm² flexible with cable end, without bezel Captive screw clamp terminals, removable terminal block, 2 x 0.25...2 x 1 mm² flexible with cable end, without bezel Captive screw clamp terminals, removable terminal block, 2 x 0.5...2 x 1.5 mm² flexible with cable end, with double bezel Captive screw clamp terminals, removable terminal block, 1 x 0.2...1 x 2.5 mm² solid without cable end Captive screw clamp terminals, removable terminal block, 1 x 0.2...1 x 2.5 mm² flexible without cable end Captive screw clamp terminals, removable terminal block, 2 x 0.2...2 x 1 mm² solid without cable end Captive screw clamp terminals, removable terminal block, 2 x 0.2...2 x 1 mm² flexible without cable end
Output Type	Relay, 2 NO circuit(s), volt-free
Number Of Additional Circuits	1 NC
[Us] Rated Supply Voltage	230 V AC - 15...10 %

Complementary

Synchronisation Time Between Inputs	0.5 s
Supply Frequency	50/60 Hz
Power Consumption In Va	4 VA
Input Protection Type	Internal, electronic
Number Of Inputs	1 NC + NO
Input Compatibility	Two-hand control conforming to EN 574/ISO 13851-III C
[Uc] Control Circuit Voltage	24 V DC

Disclaimer: This documentation is not intended as a substitute for and is not to be used for determining suitability or reliability of these products for specific user applications

Breaking Capacity	3600 VA inrush AC-15 B300 relay output 160 VA holding AC-15 B300 relay output
Breaking Capacity	1.5 A at 24 V (DC-13) time constant: 50 ms for relay output
[Ith] Conventional Free Air Thermal Current	6 A
Associated Fuse Rating	6 A gG for relay output conforming to EN/IEC 60947-5-1, DIN VDE 0660 part 200
Minimum Output Current	10 mA for relay output
Minimum Output Voltage	17 V for relay output
Maximum Response Time On Input Open	50 ms
[Ui] Rated Insulation Voltage	300 V (pollution degree 2) conforming to IEC 60947-5-1 300 V (pollution degree 2) conforming to DIN VDE 0110 part 1
[Uimp] Rated Impulse Withstand Voltage	4 kV overvoltage category III conforming to IEC 60947-5-1 4 kV overvoltage category III conforming to DIN VDE 0110 part 1
Local Signalling	3 LEDs
Mounting Support	35 mm symmetrical DIN rail
Net Weight	0.322 kg

Environment

Standards	EN/IEC 60947-5-1 EN 574 type III C/ISO 13851 EN/IEC 60204-1
Product Certifications	BG CSA UL
Ip Degree Of Protection	IP20 (terminals) conforming to EN/IEC 60529 IP40 (enclosure) conforming to EN/IEC 60529
Ambient Air Temperature For Operation	-25…55 °C
Ambient Air Temperature For Storage	-25…75 °C

Packing Units

Unit Type Of Package 1	PCE
Number Of Units In Package 1	1
Package 1 Height	4.0 cm
Package 1 Width	11.5 cm
Package 1 Length	12.5 cm
Package 1 Weight	299.0 g

Contractual warranty

Warranty	18 months

Sustainability

Green Premium™ label is Schneider Electric's commitment to delivering products with best-in-class environmental performance. Green Premium promises compliance with the latest regulations, transparency on environmental impacts, as well as circular and low-CO_2 products.

Guide to assessing product sustainability is a white paper that clarifies global eco-label standards and how to interpret environmental declarations.

Learn more about Green Premium >

Guide to assess a product's sustainability >

Transparency RoHS/REACh

Well-being performance

Toxic Heavy Metal Free	
Mercury Free	
Rohs Exemption Information	Yes
Pvc Free	

Certifications & Standards

Reach Regulation	REACh Declaration
Eu Rohs Directive	Pro-active compliance (Product out of EU RoHS legal scope) EU RoHS Declaration
China Rohs Regulation	China RoHS declaration
Environmental Disclosure	Product Environmental Profile
Weee	The product must be disposed on European Union markets following specific waste collection and never end up in rubbish bins
Circularity Profile	End of Life Information

Dimensions Drawings
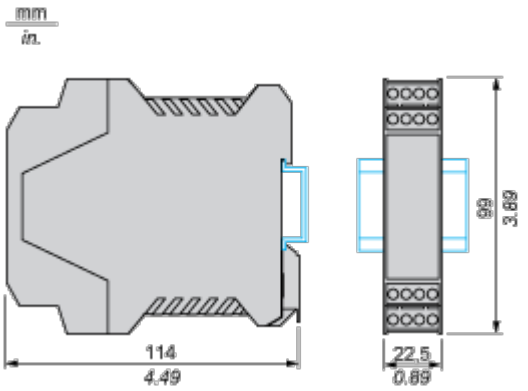
Dimensions