Product datasheet

Specifications

Green Premium™

Rotating beacon, Harmony XVR, 130mm, red, without buzzer, 24V AC DC

XVR13B04L

Main

Range Of Product	Harmony XVR
Product Or Component Type	Prewired rotating mirror beacon
Sound Signalling	Without
Device Short Name	XVR
Mounting Diameter	130 mm
Ip Degree Of Protection	IP66 conforming to IEC 60529 IP67 conforming to IEC 60529
[Us] Rated Supply Voltage	24 V AC/DC
Light Source	High luminosity LED, red

Complementary

Material	ABS (acrylonitrile butadiene-styrene): body part PC: globe
Cad Overall Width	130 mm
Cad Overall Depth	130 mm
Net Weight	0.82 kg
Marking	CE
Product Mounting	By 3 M6 screws
[Uimp] Rated Impulse Withstand Voltage	0.8 kV
Current Consumption	125 mA
Flashing Frequency	2.7 Hz
Clamping Connection Capacity	1.25 mm²
Awg Gauge	AWG 18
Cable Length	400 mm

Environment

Standards	EN/IEC 61000-6-2 EN/IEC 61000-6-4
Protective Treatment	TC
Ambient Air Temperature For Storage	-35…70 °C
Ambient Air Temperature For Operation	-30…50 °C
Electrical Shock Protection Class	Class II conforming to IEC 61140

Disclaimer: This documentation is not intended as a substitute for and is not to be used for determining suitability or reliability of these products for specific user applications

Packing Units

Unit Type Of Package 1	PCE
Number Of Units In Package 1	1
Package 1 Height	26.5 cm
Package 1 Width	18.7 cm
Package 1 Length	18.8 cm
Package 1 Weight	2.494 kg
Unit Type Of Package 2	S04
Number Of Units In Package 2	6
Package 2 Height	30.0 cm
Package 2 Width	40.0 cm
Package 2 Length	60.0 cm
Package 2 Weight	7.996 kg

Contractual warranty

Warranty	18 months

Sustainability

Green Premium™ label is Schneider Electric's commitment to delivering products with best-in-class environmental performance. Green Premium promises compliance with the latest regulations, transparency on environmental impacts, as well as circular and low-CO_2 products.

Guide to assessing product sustainability is a white paper that clarifies global eco-label standards and how to interpret environmental declarations.

Learn more about Green Premium >

Guide to assess a product's sustainability >

Transparency RoHS/REACh

Well-being performance

Rohs Exemption Information	Yes

Certifications & Standards

Reach Regulation	REACh Declaration
Eu Rohs Directive	Pro-active compliance (Product out of EU RoHS legal scope)
China Rohs Regulation	China RoHS declaration
Environmental Disclosure	Product Environmental Profile
Circularity Profile	End of Life Information

Dimensions Drawings

Rotating Mirror Beacon

Dimensions

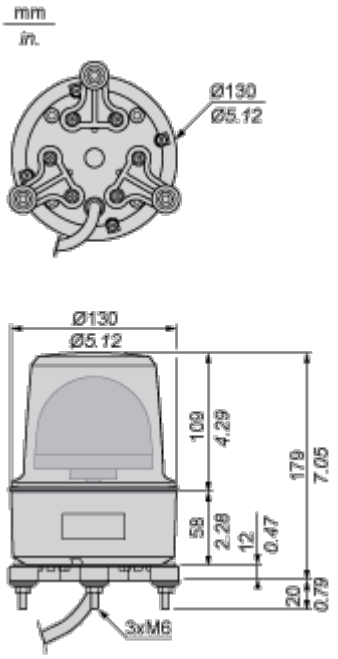

Mounting and Clearance

Rotating Mirror Beacon
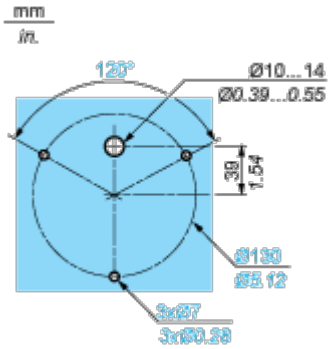
Panel Cut-out