# Product datasheet

Specifications

Green Premium™

## Complete body contact assembly, Harmony XB5, single contact, with body fixing collar, plastic, spring clamp terminal, 1NC

ZB5AZ1025

## Main

| | |
|---|---|
| **Range Of Product** | Harmony XB5 |
| **Product Or Component Type** | Complete body/contact assembly |
| **Device Short Name** | ZB5 |
| **Fixing Collar Material** | Plastic |
| **Sale Per Indivisible Quantity** | 1 |
| **Head Type** | Standard |
| **Contacts Type And Composition** | 1 NC |
| **Contact Operation** | Slow-break |
| **Contact Block Type** | Single |
| **Connections - Terminals** | Spring clamp terminals |

## Complementary

| | |
|---|---|
| **Cad Overall Width** | 46.2 mm |
| **Cad Overall Height** | 27.6 mm |
| **Cad Overall Depth** | 30 mm |
| **Terminals Description Iso N°1** | (11-12)NC |
| **Net Weight** | 0.017 kg |
| **Device Composition** | Fixing collar<br>Body |
| **Contacts Usage** | Standard contacts |
| **Positive Opening** | With conforming to IEC 60947-5-1 appendix K |
| **Operating Travel** | 1.5 mm (NC changing electrical state)<br>4.3 mm (total travel) |
| **Operating Force** | 2 N NC changing electrical state |
| **Mechanical Durability** | 10000000 cycles |
| **Contacts Material** | Silver alloy (Ag/Ni) |

## Environment

| | |
|---|---|
| **Protective Treatment** | TH |
| **Ambient Air Temperature For Storage** | -40…70 °C |
| **Ambient Air Temperature For Operation** | -40…70 °C |
| **Ip Degree Of Protection** | IP20 conforming to IEC 60529 |

Disclaimer: This documentation is not intended as a substitute for and is not to be used for determining suitability or reliability of these products for specific user applications

| | |
|---|---|
| **Standards** | IEC 60947-1<br>UL 508<br>CSA C22.2 No 14<br>IEC 60947-5-1<br>JIS C8201-5-1<br>IEC 60947-5-4<br>JIS C8201-1 |
| **Product Certifications** | DNV<br>LROS (Lloyds register of shipping)<br>GL<br>BV<br>UL<br>CSA |
| **Vibration Resistance** | 5 gn (f= 2…500 Hz) conforming to IEC 60068-2-6 |
| **Shock Resistance** | 30 gn (duration = 18 ms) for half sine wave acceleration conforming to IEC 60068-2-27<br>50 gn (duration = 11 ms) for half sine wave acceleration conforming to IEC 60068-2-27 |

## Packing Units

| | |
|---|---|
| **Unit Type Of Package 1** | PCE |
| **Number Of Units In Package 1** | 1 |
| **Package 1 Height** | 4.7 cm |
| **Package 1 Width** | 5.3 cm |
| **Package 1 Length** | 3.5 cm |
| **Package 1 Weight** | 20.0 g |
| **Unit Type Of Package 2** | S03 |
| **Number Of Units In Package 2** | 250 |
| **Package 2 Height** | 30 cm |
| **Package 2 Width** | 30 cm |
| **Package 2 Length** | 40 cm |
| **Package 2 Weight** | 5.501 kg |

## Contractual warranty

| | |
|---|---|
| **Warranty** | 18 months |

## Sustainability

**Green Premium™ label** is Schneider Electric's commitment to delivering products with best-in-class environmental performance. Green Premium promises compliance with the latest regulations, transparency on environmental impacts, as well as circular and low-$CO_2$ products.

**Guide to assessing product sustainability** is a white paper that clarifies global eco-label standards and how to interpret environmental declarations.

Learn more about Green Premium >

Guide to assess a product's sustainability >

Transparency RoHS/REACh

## Well-being performance

| | |
|---|---|
| Reach Free Of Svhc | |
| Toxic Heavy Metal Free | |
| Mercury Free | |
| Rohs Exemption Information | Yes |

## Certifications & Standards

| | |
|---|---|
| **Reach Regulation** | REACh Declaration |
| **Eu Rohs Directive** | Pro-active compliance (Product out of EU RoHS legal scope)<br>EU RoHS Declaration |
| **China Rohs Regulation** | China RoHS declaration |
| **Environmental Disclosure** | Product Environmental Profile |
| **Weee** | The product must be disposed on European Union markets following specific waste collection and never end up in rubbish bins |
| **Circularity Profile** | End of Life Information |

Dimensions Drawings

**Dimensions**

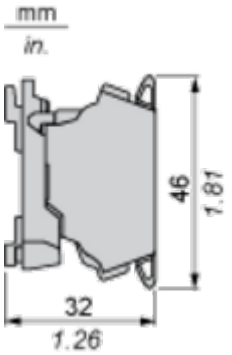

## Mounting and Clearance

### Panel Cut-out for Pushbuttons, Switches and Pilot Lights (Finished Holes, Ready for Installation)

### Connection by Screw Clamp Terminals or Plug-in Connectors or on Printed Circuit Board

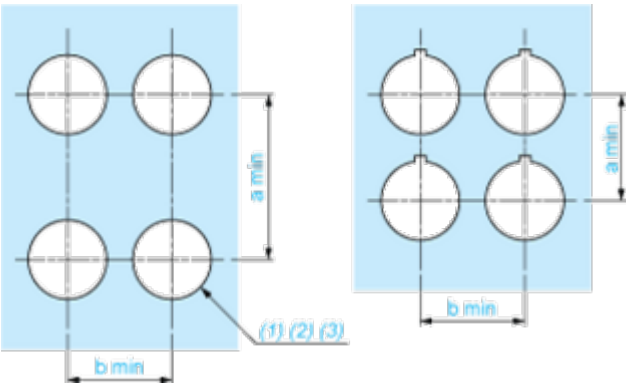


**(1)** Diameter on finished panel or support
**(2)** For selector switches and Emergency stop buttons, use of an anti-rotation plate type ZB5AZ902 is recommended.
**(3)** Ø22.5 mm recommended (Ø22.3 $_{0}^{+0.4}$) / Ø0.89 in. recommended (Ø0.88 in. $_{0}^{+0.016}$)

| Connections | a in mm | a in in. | b in mm | b in in. |
|---|---|---|---|---|
| By screw clamp terminals or plug-in connector | 40 | 1.57 | 30 | 1.18 |
| By Faston connectors | 45 | 1.77 | 32 | 1.26 |
| On printed circuit board | 30 | 1.18 | 30 | 1.18 |

### Detail of Lug Recess

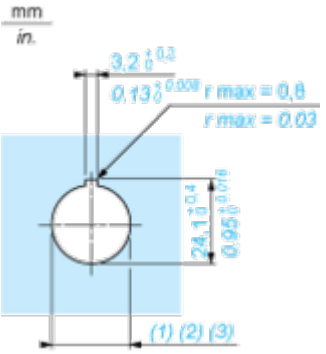


**(1)** Diameter on finished panel or support
**(2)** For selector switches and Emergency stop buttons, use of an anti-rotation plate type ZB5AZ902 is recommended.
**(3)** Ø22.5 mm recommended (Ø22.3 $_{0}^{+0.4}$) / Ø0.89 in. recommended (Ø0.88 in. $_{0}^{+0.016}$)