Product datasheet

Specifications

Complete body contact assembly, Harmony XB5, single contact, with body fixing collar, plastic, spring clamp terminal, 1NO + 1NC

ZB5AZ1055

Main

Range Of Product	Harmony XB5
Product Or Component Type	Complete body/contact assembly
Device Short Name	ZB5
Fixing Collar Material	Plastic
Sale Per Indivisible Quantity	1
Head Type	Standard
Contacts Type And Composition	1 NO + 1 NC
Contact Operation	Slow-break
Contact Block Type	Single
Connections - Terminals	Spring clamp terminals

Complementary

Cad Overall Width	46.2 mm
Cad Overall Height	27.6 mm
Cad Overall Depth	30 mm
Terminals Description Iso N°1	(11-12)NC (13-14)NO
Net Weight	0.021 kg
Device Composition	Fixing collar Body
Contacts Usage	Standard contacts
Positive Opening	With conforming to IEC 60947-5-1 appendix K
Operating Travel	1.5 mm (NC changing electrical state) 2.6 mm (NO changing electrical state) 4.3 mm (total travel)
Mechanical Durability	10000000 cycles
Contacts Material	Silver alloy (Ag/Ni)

Environment

Protective Treatment	TH
Ambient Air Temperature For Storage	-40…70 °C
Ambient Air Temperature For Operation	-40…70 °C
Ip Degree Of Protection	IP20 conforming to IEC 60529

Disclaimer: This documentation is not intended as a substitute for and is not to be used for determining suitability or reliability of these products for specific user applications

Standards	IEC 60947-5-1 IEC 60947-1 CSA C22.2 No 14 IEC 60947-5-4 JIS C8201-5-1 UL 508 JIS C8201-1
Product Certifications	UL GL LROS (Lloyds register of shipping) DNV BV CSA
Vibration Resistance	5 gn (f= 2…500 Hz) conforming to IEC 60068-2-6
Shock Resistance	30 gn (duration = 18 ms) for half sine wave acceleration conforming to IEC 60068-2-27 50 gn (duration = 11 ms) for half sine wave acceleration conforming to IEC 60068-2-27

Packing Units

Unit Type Of Package 1	PCE
Number Of Units In Package 1	1
Package 1 Height	3.200 cm
Package 1 Width	3.800 cm
Package 1 Length	5.200 cm
Package 1 Weight	29.000 g
Unit Type Of Package 2	BB1
Number Of Units In Package 2	5
Package 2 Height	4.200 cm
Package 2 Width	26.500 cm
Package 2 Length	3.400 cm
Package 2 Weight	147.000 g
Unit Type Of Package 3	S03
Number Of Units In Package 3	250
Package 3 Height	30.000 cm
Package 3 Width	30.000 cm
Package 3 Length	40.000 cm
Package 3 Weight	7.893 kg

Contractual warranty

Warranty	18 months

Sustainability

Green Premium™ label is Schneider Electric's commitment to delivering products with best-in-class environmental performance. Green Premium promises compliance with the latest regulations, transparency on environmental impacts, as well as circular and low-CO_2 products.

Guide to assessing product sustainability is a white paper that clarifies global eco-label standards and how to interpret environmental declarations.

Learn more about Green Premium >

Guide to assess a product's sustainability >

Transparency RoHS/REACh

Well-being performance

Reach Free Of Svhc	
Toxic Heavy Metal Free	
Mercury Free	
Rohs Exemption Information	Yes

Certifications & Standards

Reach Regulation	REACh Declaration
Eu Rohs Directive	Pro-active compliance (Product out of EU RoHS legal scope) EU RoHS Declaration
China Rohs Regulation	China RoHS declaration
Environmental Disclosure	Product Environmental Profile
Weee	The product must be disposed on European Union markets following specific waste collection and never end up in rubbish bins
Circularity Profile	End of Life Information

Dimensions Drawings

Dimensions

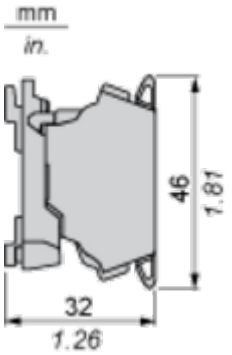

Mounting and Clearance

Panel Cut-out for Pushbuttons, Switches and Pilot Lights (Finished Holes, Ready for Installation)

Connection by Screw Clamp Terminals or Plug-in Connectors or on Printed Circuit Board

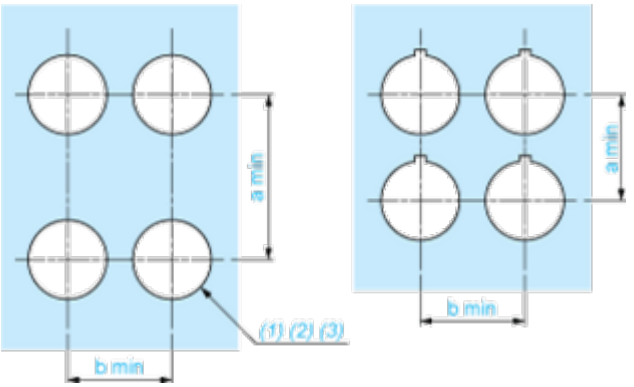

(1) Diameter on finished panel or support
(2) For selector switches and Emergency stop buttons, use of an anti-rotation plate type ZB5AZ902 is recommended.
(3) Ø22.5 mm recommended (Ø22.3 $_{0}^{+0.4}$) / Ø0.89 in. recommended (Ø0.88 in. $_{0}^{+0.016}$)

Connections	a in mm	a in in.	b in mm	b in in.
By screw clamp terminals or plug-in connector	40	1.57	30	1.18
By Faston connectors	45	1.77	32	1.26
On printed circuit board	30	1.18	30	1.18

Detail of Lug Recess

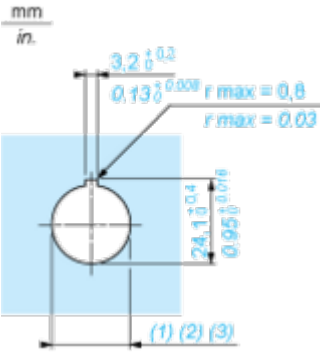

(1) Diameter on finished panel or support
(2) For selector switches and Emergency stop buttons, use of an anti-rotation plate type ZB5AZ902 is recommended.
(3) Ø22.5 mm recommended (Ø22.3 $_{0}^{+0.4}$) / Ø0.89 in. recommended (Ø0.88 in. $_{0}^{+0.016}$)